INDEX

We pay attention to customer's satisfaction of our products.
PARKSON will be your best partner if you need any assistance.

MNC SERIES
CNC Rotary Table

CNC Rotary Table
MNC-130、171、220、280、320、401、500、503、631、800、1000、1200

Optional accessories: tailstock, booster, chuck, controller

PAR SERIES
CNC Tilting Rotary Table

CNC Tilting Rotary Table
PAR-131、170、251、320、PARS-352、400、PARS-403、501、630、PARG-510、PARD-350、500

DMTRT SERIES
CNC Tilting Rotary Table

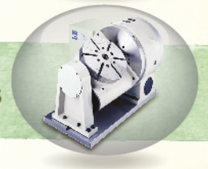

CNC Tilting Rotary Table
DMTRT-170L、220L、280L、320L

FMH SERIES
Horizontal CNC Rotary Table

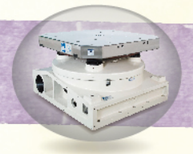

Horizontal CNC Rotary Table
FMH-401P2、501P2、630P2、800P2、1010P2、1250P2

FMHG SERIES
Horizontal Index Table

Horizontal Index Table
FMHG-400P2、500P2、630P2、800P2、1010P2、1250P2

APC SERIES
Auto Pallet Changer System

Auto Pallet Changer System
APC-HS502、T501、H630、HS800、4056、4072、5070、4060、96120

PARKSON

" Talent " is the main property of a company.

HMC SERIES
Horizontal CNC Rotary Table

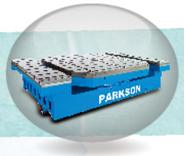

Horizontal CNC Rotary Table
HMC-500、630、800、1416、1820、2020

HMD SERIES
Horizontal CNC Rotary Table

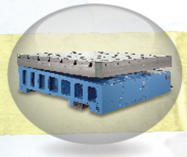

Horizontal CNC Rotary Table
HMD-1250、1416、1820、2525

HMG SERIES
Horizontal Index Table

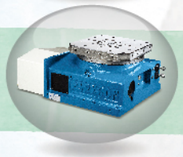

Horizontal Index Table
HMG3-501、HMG-631、HMG-801、HMG3-1010

VLHI SERIES
Hydraulic Index Table

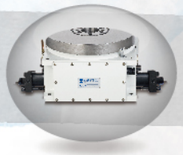

Hydraulic Index Table
VLHI-201、251、350、501、601、800

ACCURACY STANDARD

ALL SERIES

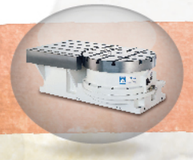

MNC SERIES

CNC Rotary Table

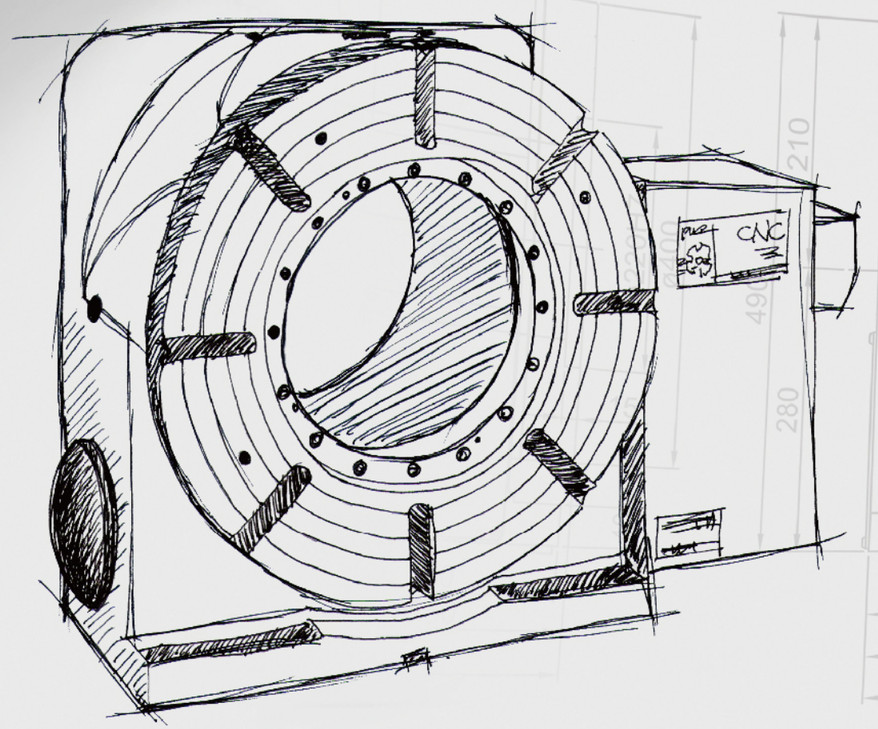

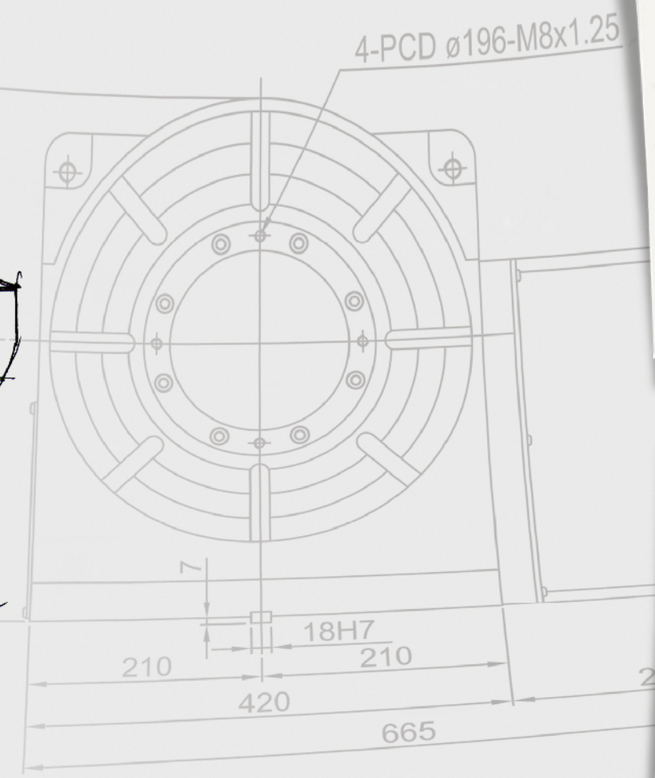

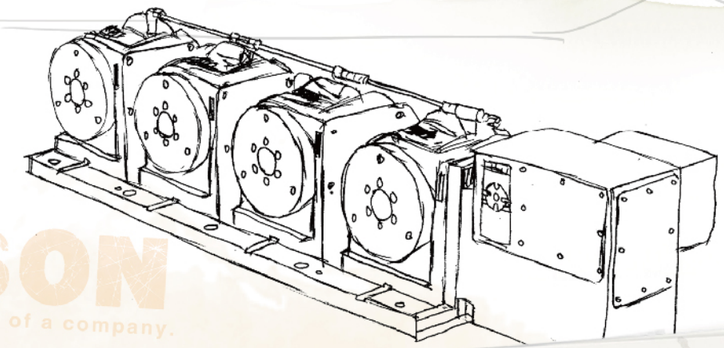

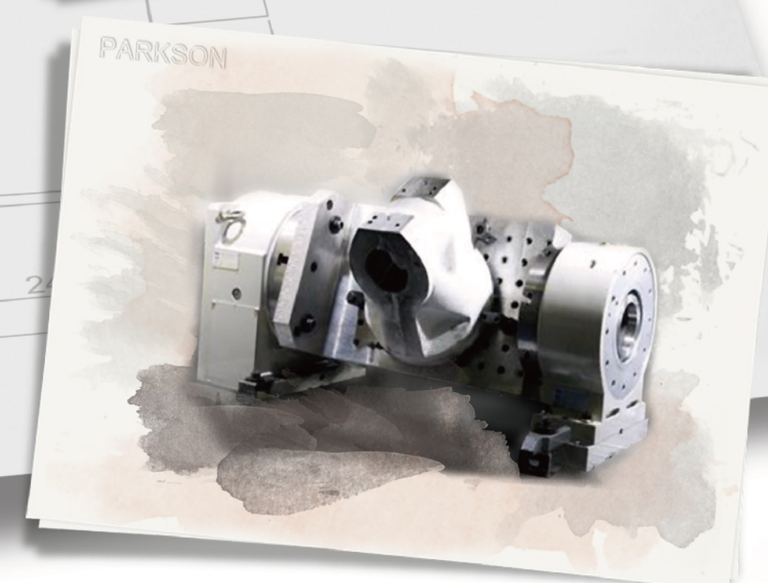

MNC SERIES

CNC Rotary Table

MNC-401R(H)

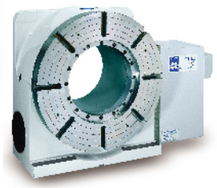

Product Feature

1 · High accuracy and high rigidity.
2 · The 4th axis can be operated synchronously with machining tools.
3 · The 4th axis can be operated with a single controller.
4 · Available for horizontal and vertical using.

Model Classification

MNC - 401R(H)

- MNC → CNC Rotary Table
- Ø400 → Table diameter
- 1 → Edition
- R → Motor position
  R: On the right; L: On the left; BR: On the back
- (H) → Clamping system:
  A: Pneumatic; H: Hydraulic

Item	Model	Unit	MNC - 130	MNC - 171	MNC - 220	MNC - 280	MNC - 320	MNC - 401
Table Diameter		mm	Ø130	Ø170	Ø220	Ø280	Ø320	Ø400
Overall Height in Horizontal		mm	153	175	205	220	245	250
Center Height in Vertical		mm	105	135	160	190	230	280
Through Hole Diameter		mm	Ø37	Ø45	Ø64	Ø90	Ø105	Ø170
Spindle Hole Diameter		mm	Ø30H7	Ø45H7	Ø64H7	Ø90H7	Ø105H7	Ø220H7
Width of T-slot		mm	10H7	12H7	12H7	12H7	14H7	14H7
Width of Guide Block		mm	18H7					
Servo Motor (Optional)	FANUC		α2i	α4i	α4i	α8i	α12i	α12i
	MELDAS		HF-75T	HF-104S	HF-104S	HF-154T	HF-204S	HF-204S
	SIEMENS		1FK7042	1FK7060	1FK7060	1FK7063	1FK7083	1FK7083
	HEIDENHAIN		QSY96A	QSY116C	QSY116C	QSY116E	QSY155B	QSY155B
Total Reduction Ratio			1:45	1:60	1:90	1:120	1:120	1:180
Max. Rotation Speed (Motor 2000min^{-1})		r.p.m.	44.4	33.3	22.2	16.7	16.7	11.1
Min. Increment		deg.	0.001					
Indexing Accuracy		arc-sec	60	20	20	20	20	15
Repeatabilitiy Accuracy		arc-sec	6					
Clamping Torque (kgf-m)	Pneumatic 6kg/cm^2	kgf-m	10	15	30	38	53	–
	Hydraulic 35kg/cm^2	kgf-m	–	44	90	112	153	200
Driving Torque		kg-m	10	20	25	55	80	173
Max. Work Load	Vertical W/ Tailstock	kg	35(70)	75(150)	75(200)	150(300)	175(350)	300(500)
	Horizontal	kg	70	150	200	300	350	500
Allowable Load (clamped)	F	kgf	600	1000	1100	2200	2450	3500
	FXL	kgf-m	10	44	90	112	153	200
	FXL	kgf-m	16	70	140	170	240	320
Allowable Work Inertia	$J=\frac{W\cdot D^2}{8}$	kg-m^2	0.14	0.54	1.21	2.94	4.48	10
N.W.		kg	30	50	77	120	170	275

MNC-130R

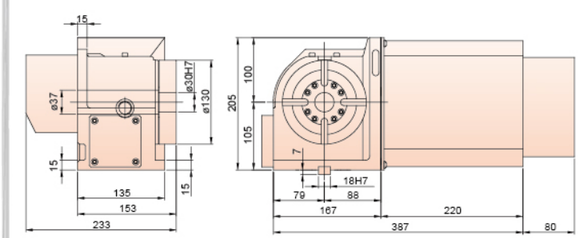

MNC-171R

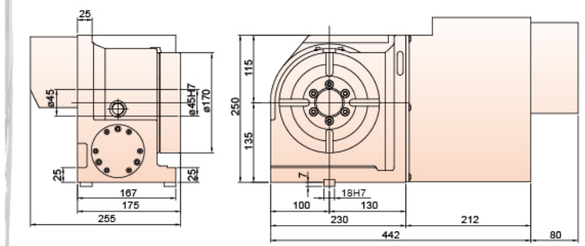

MNC-220R

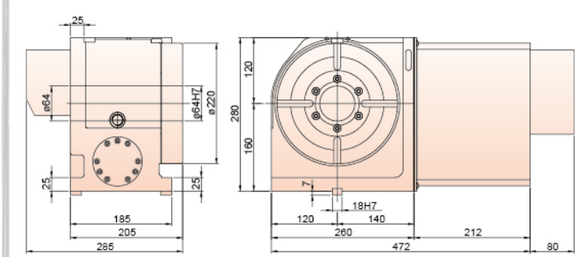

MNC-280R

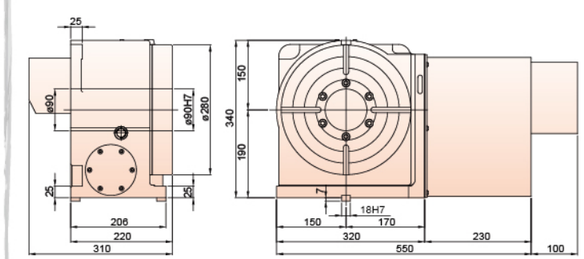

MNC-320R

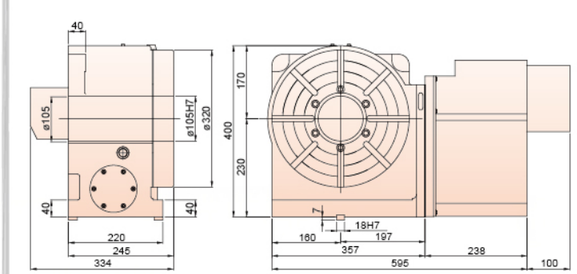

MNC-401R

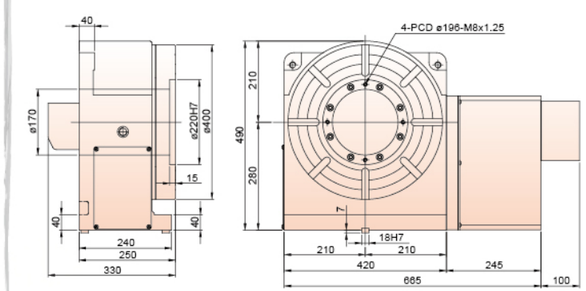

1. Please contact us for more detailed specification.
2. Parkson owns the rights to modify the drawing and specification.
3. Servo motors, drives. encoders, and hydraulic units are excluded.

MNC SERIES

CNC Rotary Table

MNC-170R4

Product Feature

1 · High accuracy and high rigidity.
2 · The 4th axis can be operated synchronously with machining tools.
3 · The 4th axis can be operated with a single controller.
4 · Available for horizontal and vertical using.

Model Classification

MNC - 401R(H)

- MNC → CNC Rotary Table
- Ø400 → Table diameter
- 1 → Edition
- R → Motor position
  R: On the right; L: On the left;
  BR: On the back
- (H) → Clamping system:
  A: Pneumatic; H: Hydraulic

Item / Model		Unit	MNC - 450	MNC - 503	MNC - 631	MNC - 800	MNC - 1000	MNC - 1200
Table Diameter		mm	Ø450	Ø500	Ø630	Ø800	Ø1000	Ø1200
Overall Height in Horizontal		mm	240	275	330	360	439	590
Center Height in Vertical		mm	310	310	420	480	650	700
Through Hole Diameter		mm	Ø210	Ø254	Ø206	Ø190	Ø356	Ø440
Spindle Hole Diameter		mm	Ø245H7	Ø245H7	Ø285H7	Ø285H7	Ø400H7	Ø600H7
Width of T-slot		mm	18H7	18H7	18H7	22H7	22H7	22H7
Width of Guide Block		mm	18H7	18H7	22H7	22H7	22H7	22H7
Servo Motor (Optional)	FANUC		α12i	α12i	α22i	α22i	α22i	α30i
	MELDAS		HF-204S	HF-204S	HF-354S	HF-453S	HF-453S	HF-703S
	SIEMENS		1FK7083	1FK7083	1FK7101	1FK7101	1FK7103	1FK7105
	HEIDENHAIN		QSY155B	QSY155B	QSY155D	QSY155D	QSY190C	QSY190D
Total Reduction Ratio			1:180	1:180	1:180	1:180	1:360	1:720
Max. Rotation Speed (Motor 2000min^{-1})		r.p.m.	11.1	11.1	11.1	11.1	5.6	2.8
Min. Increment		deg.	0.001					
Indexing Accuracy		arc-sec	15	15	15	15	15	15
Repeatabilitiy Accuracy		arc-sec	6					
Clamping Torque (kgf-m)	Hydraulic 35~50kg/cm^2	kgf-m	220	350	400	435	800	1200
Driving Torque		kg-m	255	255	450	480	550	640
Max. Work Load	Vertical W/ Tailstock	kg	350(600)	350(600)	450(1000)	1000(2000)	1500(3500)	2000(5000)
	Horizontal	kg	500	600	1000	2000	3500	5000
Allowable Load (clamped)	F	kgf	4000	4000	4500	4500	5000	5000
	FXL	kgf-m	220	350	400	435	800	1200
	FXL	kgf-m	560	560	640	690	1280	1920
Allowable Work Inertia	$J=\frac{W \cdot D^2}{8}$	kg-m^2	12.66	18.75	49.61	160	437.5	900
N.W.		kg	280	340	720	1200	1600	2100

MNC-450R

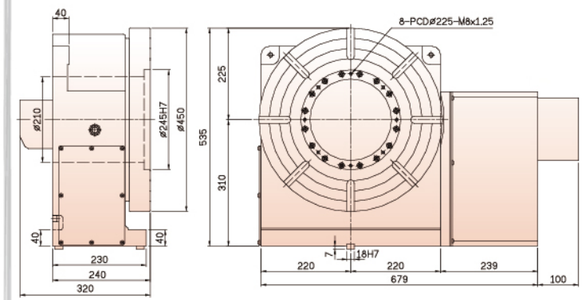

MNC-503R

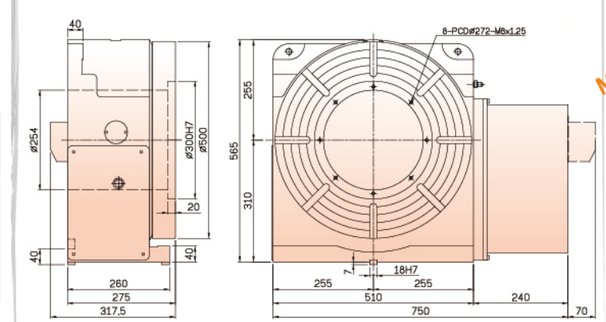

MNC-631R

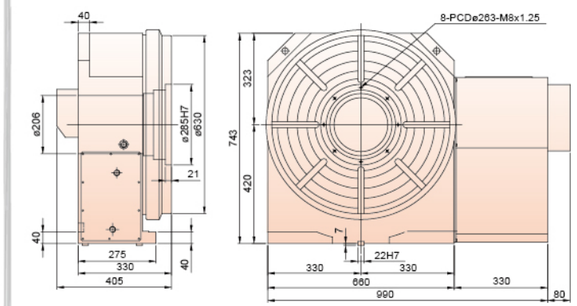

MNC-800R

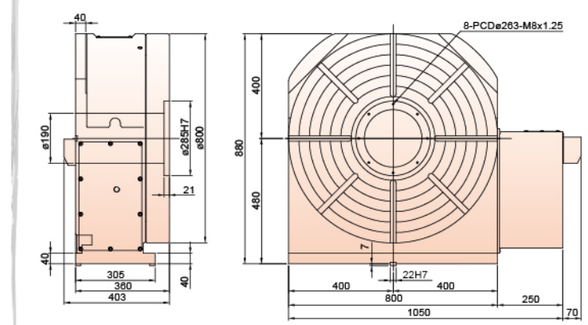

MNC-1000R

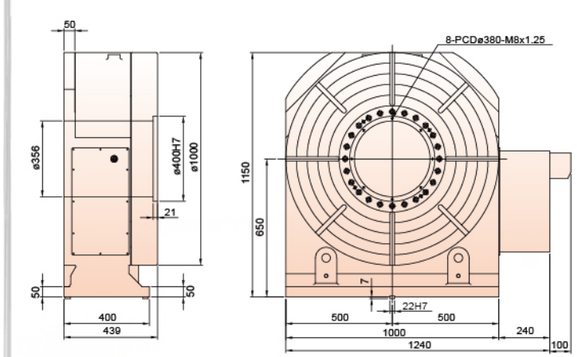

MNC-1200R

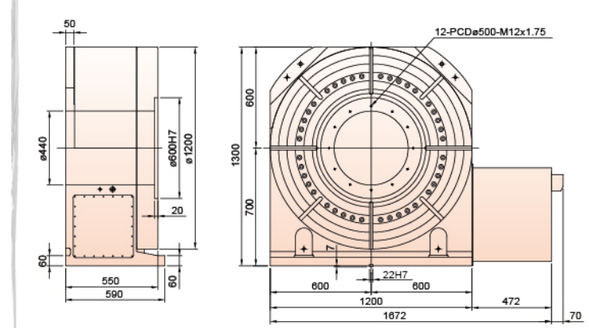

1. Please contact us for more detailed specification.
2. Parkson owns the rights to modify the drawing and specification.
3. Servo motors, drives. encoders, and hydraulic units are excluded.

MNC Optional Accessories

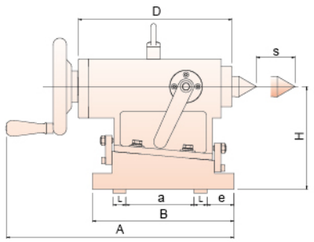

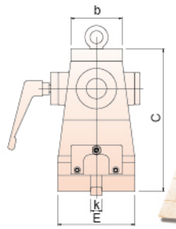

DTS Manual Tailstock Series

Model Classification

DTS - 171A

DTS → Manual Tailstock

Ø171 → Table Diameter

A → A: Pneumatic
H: Hydraulic

MODEL	H	A	B	C	D	E	a	b	e	s	k	L	Center Bore	N.W.
DTS-130	105	306	180	135	181	80	76	80	32	30	18H7	20	MT-2	10
DTS-171	135	306	180	165	181	80	76	80	32	30	18H7	20	MT-2	12.5
DTS-220	160	352	220	222	239	120	120	80	30	60	18H7	20	MT-4	25
DTS-280	190	352	220	252	239	120	120	80	30	60	18H7	20	MT-4	28
DTS-320	230	352	220	292	239	120	120	80	30	60	18H7	20	MT-4	30.5
DTS-400	280	352	220	342	239	120	120	80	30	60	18H7	20	MT-4	35

DAS Round Plate Type
Braking Tailstock Series

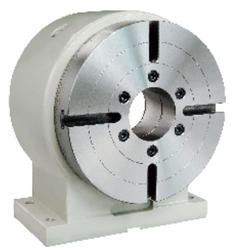

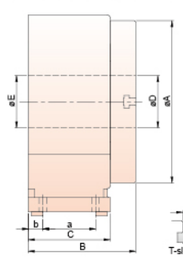

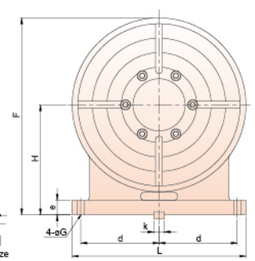

MODEL	H	A	B	C	D	E	F	G	a	b	d	e	K	L	T	N.W.
DAS-130	105	130	123	90.5	30H7	38	182	11	60	15.25	80	20	14H7	190	10H7	16
DAS-171	135	170	150	114	45H7	45	240	11	74	20	93	25	18H7	210	12H7	21
DAS-220	160	220	165	125	64H7	64	280	13	75	25	105	25	18H7	240	12H7	52
DAS-280	190	280	185	141	90H7	90	340	13	91	25	135	25	18H7	300	12H7	84
DAS-320	230	320	195	142	105H7	105	400	13	92	25	145	40	18H7	320	14H7	113
DAS-400	280	400	215	185	220H7	170	490	18	100	35	200	40	18H7	440	14H7	125
DAS-500	310	500	209	160	300H7	254	565	18	100	30	210	40	18H7	470	18H7	229

PAH-3A
Hydraulic booster

HTS Hydraulic tailstock series

SK 3-Jaw chuck series

Controller series

MNC Optional Accessories-Height Block

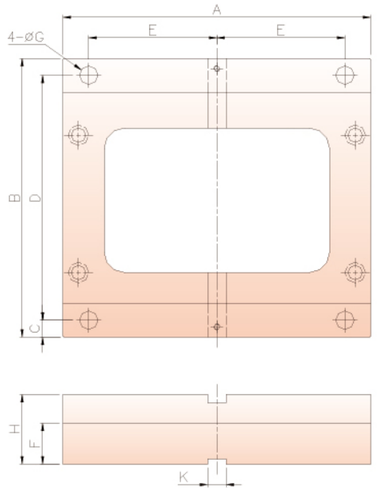

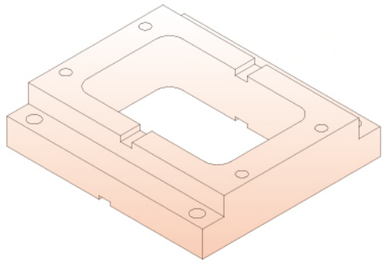

Height Block Specification(With MNC)

Model	H	A	B	C	D	E	F	G	K
MNC-130	20	238	191	14	163	100	20	18	18H7
	30	238	191	14	163	100	30	18	18H7
	40	238	191	14	163	100	25	18	18H7
MNC-170	20	235	201	14	173	100	20	18	18H7
	30	235	201	14	173	100	30	18	18H7
	40	235	201	14	173	100	25	18	18H7
MNC-171	20	235	223	14	195	100	20	18	18H7
	30	235	223	14	195	100	30	18	18H7
	40	235	223	14	195	100	25	18	18H7
MNC-220	28	260	255	18	219	100	20	18	18H7
	38	260	255	18	219	100	25	18	18H7
	48	260	255	18	219	100	40	18	18H7
MNC-280	28	300	278	18	242	100	20	18	18H7
	38	300	278	18	242	100	25	18	18H7
	48	300	278	18	242	100	40	18	18H7
MNC-320	38	330	286	18	252	125	25	18	18H7
	48	330	286	18	252	125	40	18	18H7
	58	330	286	18	252	125	40	18	18H7
MNC-401	38	420	310	18	274	125	25	18	18H7
	48	420	310	18	274	125	40	18	18H7
	58	420	310	18	274	125	40	18	18H7
MNC-500	38	510	305	18	268	200	25	18	18H7
	48	510	305	18	268	200	40	18	18H7
	58	510	305	18	268	200	40	18	18H7

MNC Optional Accessories - illustration

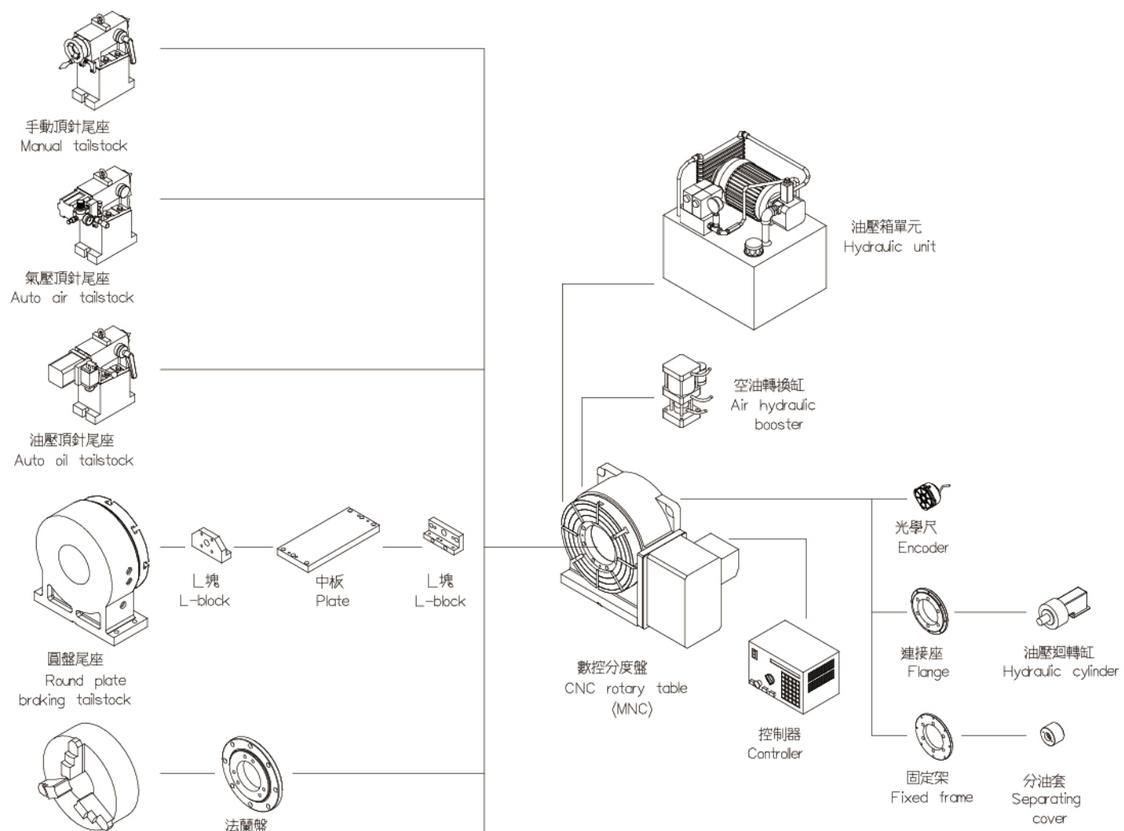

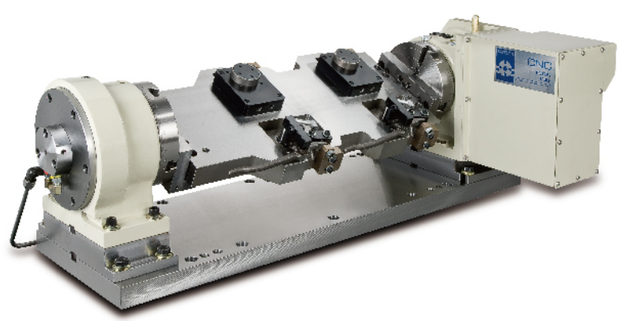

MNC Optional Accessories

Item	Model	MNC - 130R	MNC - 171R	MNC - 220R	MNC - 280R	MNC - 320R
3 jaw chuck-Manual scroll chuck	Model	SC-4	SK-6	SK-8	SK-10	SK-12
	Size	4"	6"	8"	10"	12"
3 jaw chuck-Hydraulic chuck (non through hole)	Model	V-206	V-206	V-208	V-210"	V-212
	Size	6"	6"	8"	10"	12"
Rotary hydraulic cylinder	Model	MH100	MH100	MH125	MH125	MH150
Tailstock	Manul	DTS-130	DTS-171	DTS-220	DTS-280	DTS-320
	Round Plate	DAS-130	DAS-171	DAS-220	DAS-280	DAS-320
Servo motor	FANUC	α2i	α4i	α4i	α8i	α12i
	MELDAS	HF-75T	HF-104S	HF-104S	HF-154T	HF-204S
	SIEMENS	1FK7042	1FK7060	1FK7060	1FK7063	1FK7083
	HEIDENHAIN	QSY96A	QSY116C	QSY116C	QSY116E	QSY155B

Item	Model	MNC - 401R	MNC - 500R	MNC - 631R	MNC - 800R
3 jaw chuck-Manual scroll chuck	Model	SK-12	SK-12	SK-16	SK-16
	Size	12"	12"	16"	16"
3 jaw chuck-Hydraulic chuck (non through hole)	Model	V-212	V-212	V-215 / V-218	V-215 / V-218
	Size	12"	12"	15" / 18"	15" / 18"
Rotary hydraulic cylinder	Model	MH150	MH150	MH200	MH200
Tailstock	Manul	DTS-400	DTS-500	DTS-630	DTS-800
	Round Plate	DAS-400	DAS-500	DAS-630	DAS-800
Servo motor	FANUC	α12i	α12i	α22i	α22i
	MELDAS	HF-204S	HF-204S	HF-354S	HF-453S
	SIEMENS	1FK7083	1FK7083	1FK7101	1FK7101
	HEIDENHAIN	QSY155B	QSY155B	QSY155D	QSY155D

1. Please contact us for more detailed specification.
2. Parkson owns the rights to modify the drawing and specification.
3. Servo motors, drives. encoders, and hydraulic units are excluded.

PAR SERIES
CNC Tilting Rotary Table

DMTRT SERIES
CNC Tilting Rotary Table

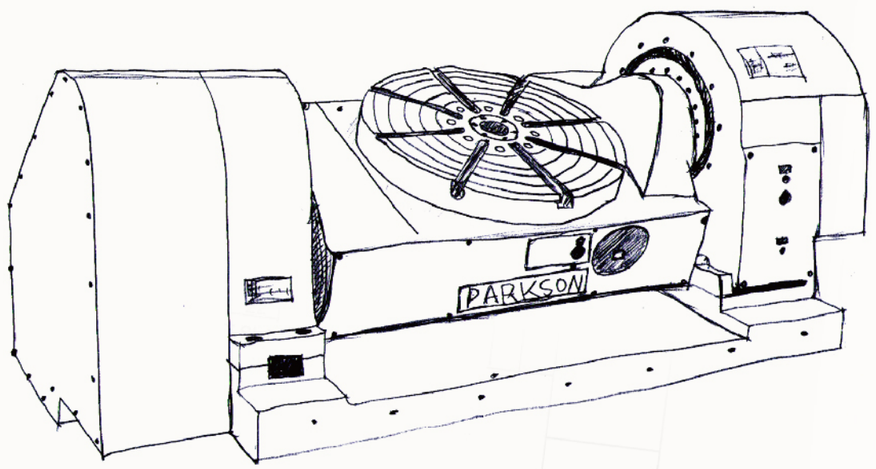

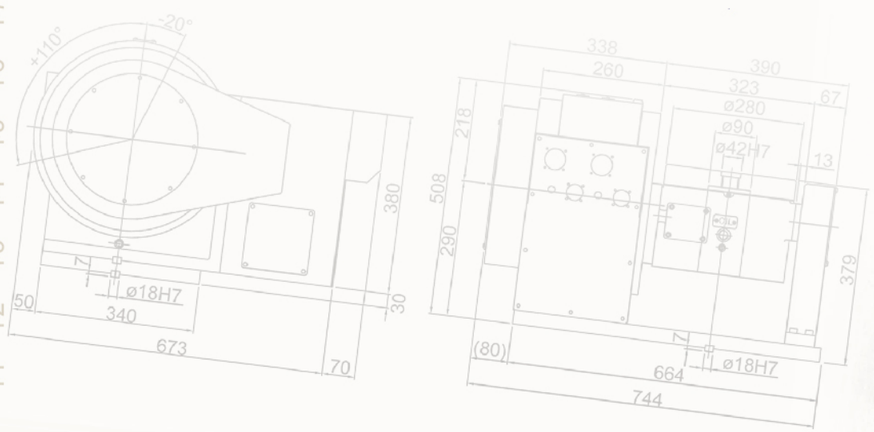

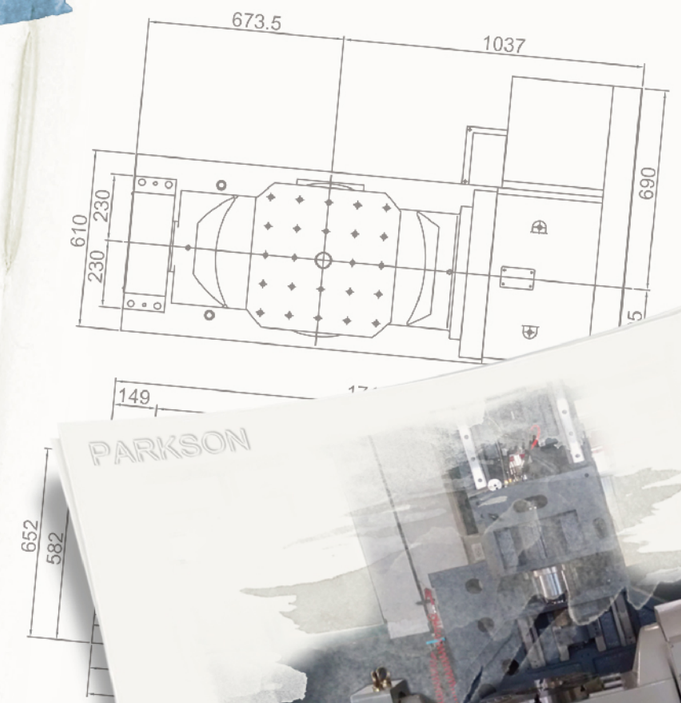

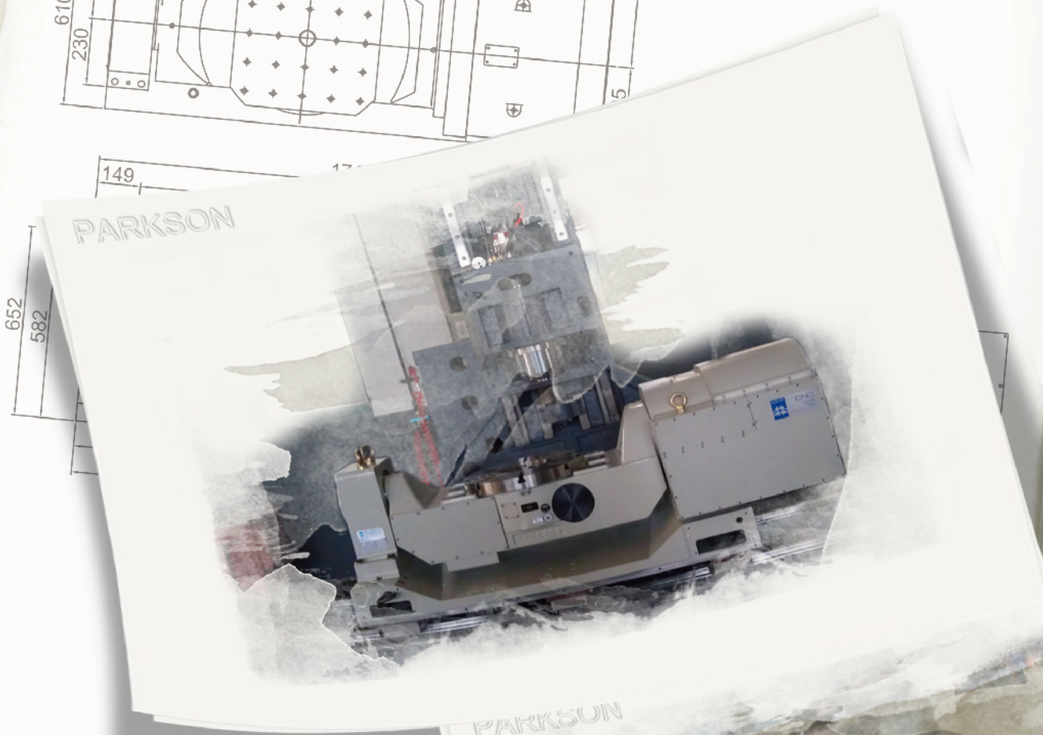

PARKSON CNC ROTARY TABLES
Partake Knowledge Secure On

PAR SERIES

CNC Tilting Rotary Table

PARS-501L

Product Feature

1. High accuracy, and high rigidity with a big through hole.
2. The 5th axis can be operated synchronously with machining tools.
3. Can be operated with a double axis controller to do double axis control.

Model Classification

PARS-501L

- PAR → CNC Tilting Rotary Table
- S → Special model D : D.D.Motor G : Gear positioning S : Cradle type W : Waterproof
- Ø500 → Table diameter
- 1 → Edition
- L → Motor position R : On the right L : On the left BR : On the back

Table type : Single arm

Item / Model		Unit	PAR-131		PAR-170		PAR-251		PAR-320		PARS-352		PAR-400	
Table Diameter		mm	Ø130		Ø170		Ø250		Ø320		Ø350		Ø400	
Overall Height in Horizontal		mm	290		340		365		525		563		525	
Center Height in Vertital		mm	155		195		210		310		375		310	
Overall Height in Vertical		mm	220		275		310		430		375		430	
Overall Length		mm	623		990		868		1080		1341		1170	
Through Hole Diameter		mm	Ø30		Ø45		Ø64		Ø105		Ø90		Ø105	
Spindle Hole Diameter		mm	Ø30H7		Ø45H7		Ø42H7		Ø160H7		Ø160H7		Ø160H7	
Width of T-slot		mm	10H7		12H7		12H7		14H7		12H7		14H7	
Width of Guide Block		mm	18H7		18H7		18H7		22H7		18H7		22H7	
Axis			Rotating	Tilting	Rotating	Tilting	Rotating	Tilting	Rotating	Tilting	Rotating	Tilting	Rotating	Tilting
Servo motor (Optional)	FANUC		α2i	α4i	α2i	α4i	α4i	α8i	α8i	α12i	α8i	α22i	α12i	α12i
	MELDAS		HF75T	HF104S	HF75T	HF104S	HF104S	HF154T	HF154T	HF204S	HF154T	HF354S	HF204S	HF204S
	SIEMENS		1FK7042	1FK7060	1FK7042	1FK7060	1FK7060	1FK7063	1FK7063	1FK7083	1FK7063	1FK7083	1FK7083	1FK7083
	HEIDENHAIN		QSY96A	QSY116C	QSY96A	QSY116C	QSY116C	QSY116E	QSY116E	QSY155B	QSY116E	QSY155D	QSY155B	QSY155B
Total Reduction Ratio			1:60	1:90	1:72	1:100	1:120	1:180	1:120	1:180	1:90	1:150	1:120	1:180
Max. Rotation Speed (Motor 2000min⁻¹)		r.p.m.	33.3	22.2	27.8	20.0	16.7	11.1	16.7	11.1	22.2	13.3	16.7	11.1
Min. Increment		deg.	0.001											
Tilting Angle Range		deg.	+30~-120		+30~-120		-30~+120		-30~+120		-42~+120		-30~+120	
Indexing Accuracy		arc-sec	60	60	15	45	15	45	15	45	15	45	15	45
Repeatability Accuracy		arc-sec	6	8	6	8	6	8	6	8	6	8	6	8
Clamping Torque	Pneumatic 6kg/cm²	kgf-m	10	-	15	30	30	38	-	-	-	-	-	-
	Hydraulic 35kg/cm²	kgf-m	-	45	44	90	90	112	153	212	112	153	153	212
Driving Torque		kg-m	10		20		55		80		80		173	
Max. Work Load	Horizontal (0°~45°)kg	kg	50		70		100		200		200		200	
	Tilting (60°~90°)kg	kg	35		45		75		150		100		150	
Allowable Load (clamped)	F	kgf	380		700		1150		1800		1800		2500	
	FXL	kgf-m	10		44		90		153		112		153	
	FXL	kgf-m	45		90		112		212		153		212	
Allowable Work Inertia	$J=\frac{W\cdot D^2}{8}$	kg-m²	0.1		0.25		0.78		2.56		3.09		4	
N.W.		kg	90		200		350		770		600		790	

PAR-131RC

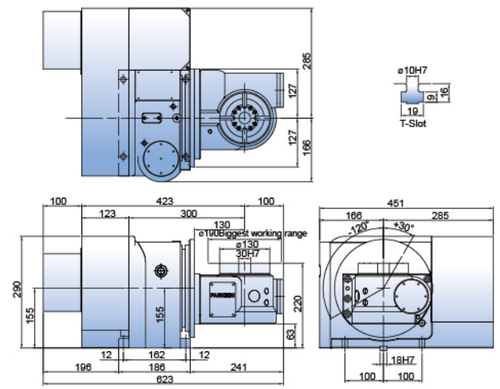

PAR-170BR

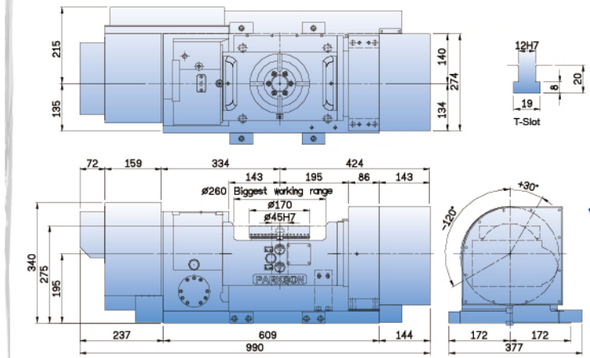

PAR-251R(L)

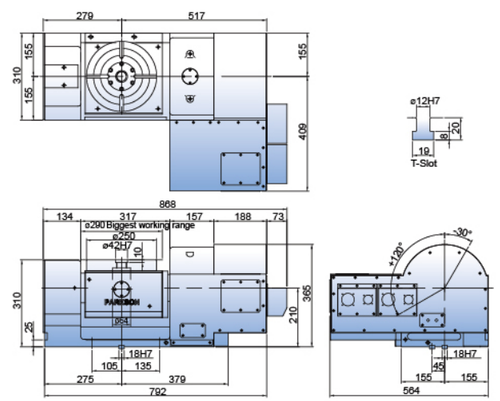

PAR-320R(L)

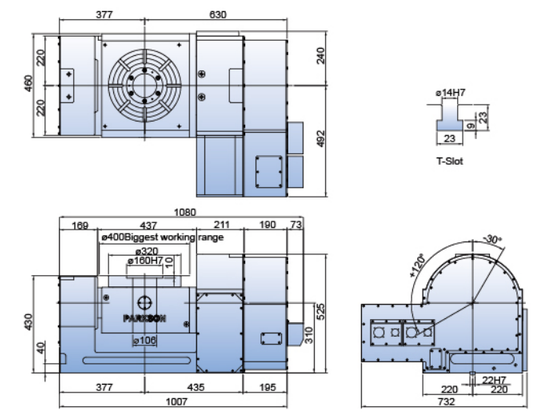

PARS-352BR

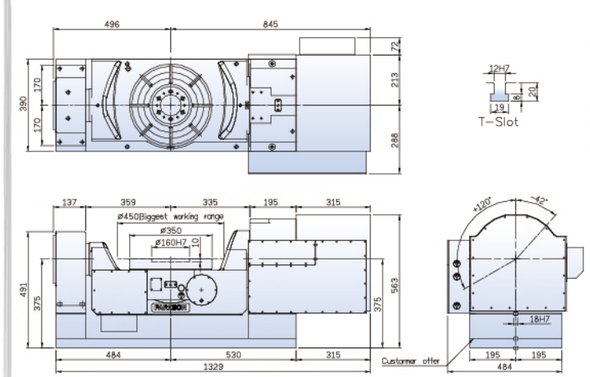

PAR-400R(L)

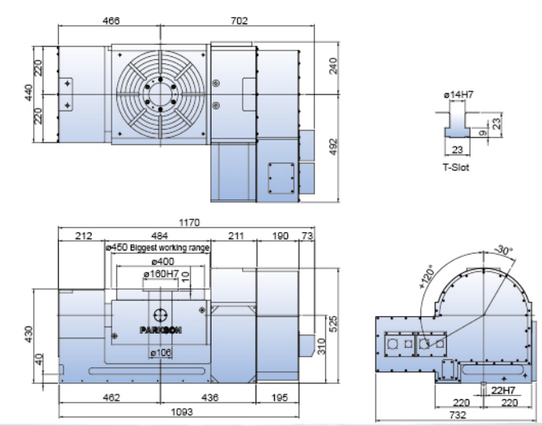

1. Please contact us for more detailed specification.
2. Parkson owns the rights to modify the drawing and specification.
3. Servo motors, drives. encoders, and hydraulic units are excluded.

PARKSON CNC ROTARY TABLES
Partake Knowledge Secure On

PAR SERIES

CNC Tilting Rotary Table

PARG-501LS

Product Feature

1 .High accuracy, and high rigidity with a big through hole.
2 .The 5th axis can be operated synchronously with machining tools.
3 .Can be operated with a double axis controller to do double axis control.

Model Classification

PARS-501L

- PAR → CNC Tilting Rotary Table
- S → Special model D : D.D.Motor G : Gear positioning S : Cradle type W : Waterproof
- Ø500 → Table diameter
- 1 → Edition
- L → Motor position R : On the right L : On the left BR : On the back

Table type : Single arm

Item / Model		Unit	PARS-403		PARS-501		PARG-510		PARS-630		PARD-350		PARD-500	
Table Diameter		mm	Ø400		Ø500		500x500		Ø630		Ø350		Ø550	
Overall Height in Horizontal		mm	563		645		767		805		613		713	
Center Height in Vertital		mm	375		430		582		495		425		498	
Overall Height in Vertical		mm	375		430		582		495		375		498	
Overall Length		mm	1517		1497		1643		1673		1424		1798	
Through Hole Diameter		mm	Ø90		-		Ø50		-		-		-	
Spindle Hole Diameter		mm	Ø160H7		Ø55H7		Ø50H7		Ø55H7		Ø50H7		Ø55H7	
Width of T-slot		mm	12H7		14H7		-		18H7		12H7		14H7	
Width of Guide Block		mm	18H7		18H7		22H7		22H7		18H7		18H7	
Axis			Rotating	Tilting	Rotating	Tilting	Rotating	Tilting	Rotating	Tilting	Rotating	Tilting	Rotating	Tilting
Servo motor (Optional)	FANUC		α8i	α22i	α8i	α22i	α12i	α30i	α12i	α22i	D.D. Motor	HEIDENHAIN	D.D. Motor	D.D. Motor
	MELDAS		HF154T	HF354S	HF154T	HF354S	HF204S	HF703S	HF204S	HF354S				
	SIEMENS		1FK7063	1FK7083	1FK7063	1FK7101	1FK7083	1FK7105	1FK7083	1FK7101	TMB	QSY155D	TMB	TMB
	HEIDENHAIN		QSY116E	QSY155D	QSY116E	QSY155D	QSY155B	QSY190D	QSY155B	QSY155D	0210-50		0210-100	0291-100
Total Reduction Ratio			1:90	1:150	1:120	1:120	1:120	1:180	1:120	1:180	-	1:150	-	-
Max. Rotation Speed (Motor 2000min^{-1})		r.p.m.	22.2	13.3	16.7	16.7	16.7	11.1	16.7	11.1	50.0	13. 3	50	25
Min. increment		deg.	0.001		0.001		1		0.001		0.001		0.001	
Tilting Angle Range		deg.	-42~+120		-30~+120		-30~+120		-30~+120		-42~+120		-30~+1200	
Indexing Accuracy		arc-sec	15	45	15	45	10	10	15	45	10	20	10	20
Repeatability Accuracy		arc-sec	6	8	6	8	2	2	6	8	6	8	6	8
Clamping Torque	Pneumatic 6kg/cm^2 Hydraulic 35kg/cm^2	kgf-m	112	153	150	200	150	200	292	216	86	153	150	200
Driving Torque		kg-m	80		255		300		450		-		-	
Max. Work Load	Horizontal (0°~45°)kg	kg	200		200		400		500		200		250	
	Tilting (60°~90°)kg	kg	100		100		300		300		100		200	
Allowable Load (clamped)		kgf	2500		2800		3500		2900		1700		2700	
		kgf-m	112		150		150		292		86		150	
		kgf-m	153		200		200		216		153		200	
Allowable Work Inertia	$J=\frac{W\cdot D^2}{8}$	kg-m^2	4		6.25		13		24.8		3.06		7.81	
N.W.		kg	970		1450		2340		2100		750		1370	

PARS-403

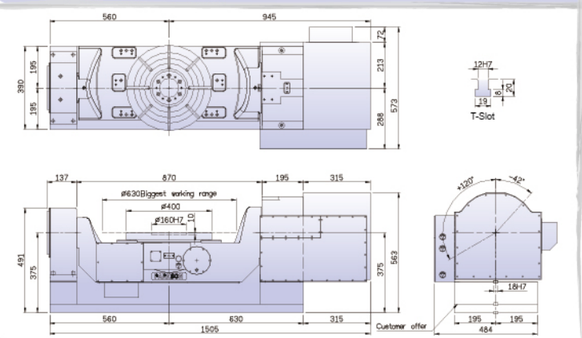

PARS-501LE

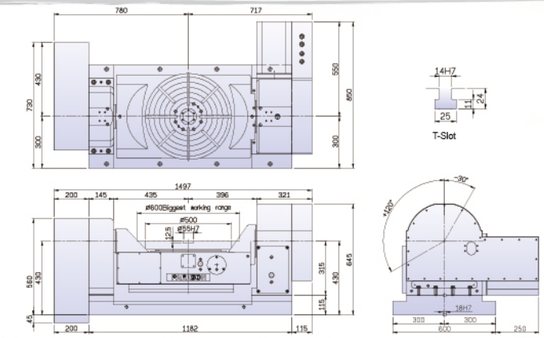

PARS-502BRP2

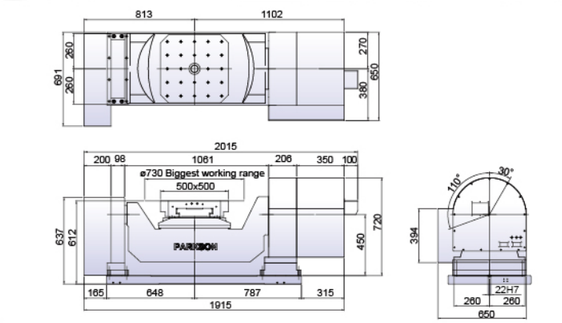

PARG-510L

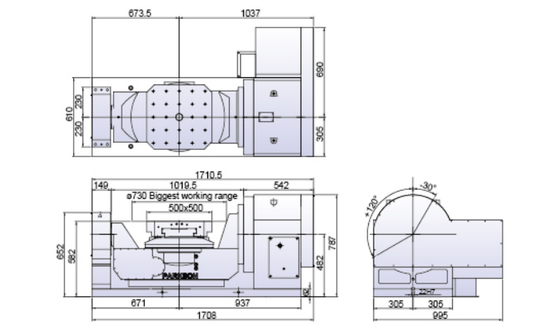

PARS-630L

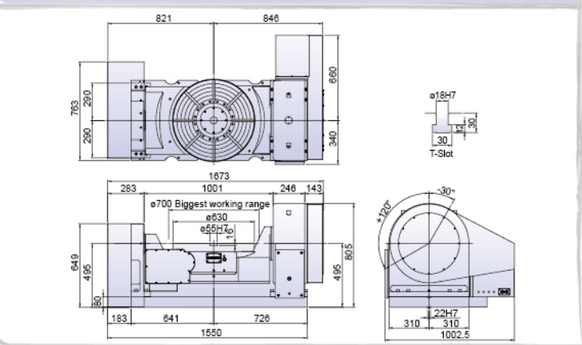

PARS-800L

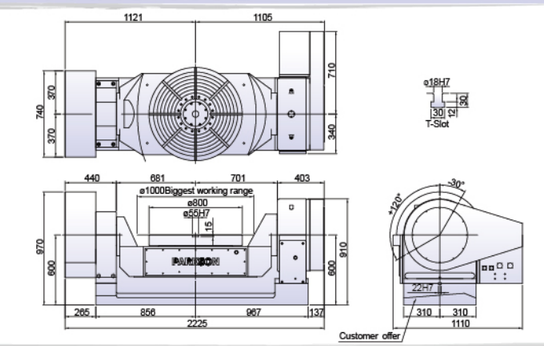

PARD-350BR

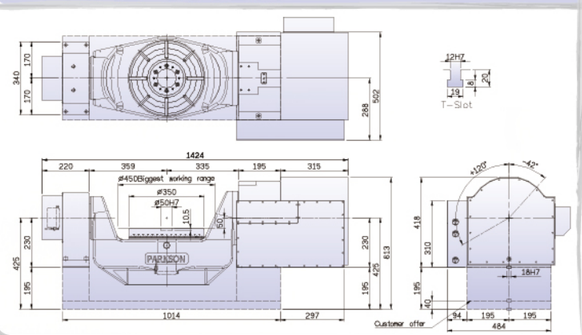

PARD-500

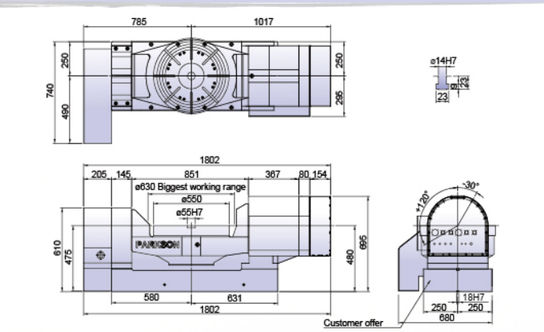

1. Please contact us for more detailed specification. 2. Parkson owns the rights to modify the drawing and specification.
3. Servo motors, drives. encoders, and hydraulic units are excluded.

DMTRT SERIES

CNC Tilting Rotary Table

DMTRT-280L

Product Feature

1. High accuracy, and high rigidity with a big through hole.
2. The 5th axis can be operated synchronously with machining tools.
3. Can be operated with a double axis controller to do double axis control.

Model Classification

DMTRT-280L

- DMTRT → CNC Tilting Rotary Table
- Ø280 → Table diameter
- L → Motor position
  L : On the left

Item / Model		Unit	DMTRT-170L		DMTRT-220L		DMTRT-280L		DMTRT-320L	
Table Diameter		mm	Ø170		Ø220		Ø280		Ø320	
Overall Height in Horizontal		mm	398		390		508		508	
Center Height in Vertital		mm	235		235		290		290	
Overall Height in Vertical		mm	310		335		379		384	
Overall Length		mm	617		631		744		805	
Through Hole Diameter		mm	Ø45		Ø64		Ø90		Ø105	
Spindle Hole Diameter		mm	Ø42H7		Ø42H7		Ø42H7		Ø42H7	
Width of T-slot		mm	12H7		12H7		12H7		14H7	
Width of Guide Block		mm	18H7		18H7		18H7		18H7	
Axis			Rotating	Tilting	Rotating	Tilting	Rotating	Tilting	Rotating	Tilting
Servo motor (Optional)	FANUC		α2i	α4i	α2i	α8i	α4i	α12i	α8i	α12i
	MELDAS		HA33	HA40	HA33	HA80	HA40	HA100	HA80	HA100
	MELDAS		HF75T	HF104S	HF75T	HF154T	HF104S	HF204S	HF154T	HF204S
	SIEMENS		1FK7042	1FK7060	1FK7042	1FK7063	1FK7060	1FK7083	1FK7063	1FK7083
	HEIDENHAIN		QSY96A	QSY116C	QSY96A	QSY116E	QSY116C	QSY155B	QSY116E	QSY155B
Total Reduction Ratio			1:60	1:120	1:90	1:120	1:120	1:180	1:160	1:180
Max. Rotation Speed (Motor 2000min^{-1})		r.p.m.	33.3	16.7	22.2	16.7	16.7	11.1	12.5	11.1
Min. Increment		deg.	0.001							
Tilting Angle Range		deg.	-20~+110							
Indexing Accuracy		arc-sec	20	60	20	60	20	45	20	45
Repeatability Accuracy		arc-sec	6	8	6	8	6	8	6	8
Clamping Torque	Pneumatic 6kg/cm^2	kgf-m	15	52	14	26	17	46	23	46
	Hydraulic 35kg/cm^2	kgf-m	44	126	82	152	99	268	134	268
Driving Torque		kg-m	20		25		55		80	
Max. Work Load	Horizontal (0°~45°)	kg	70		90		120		180	
	Tilting (60°~90°)	kg	45		55		85		110	
Allowable Load (clamped)	F	kgf	900		1100		1650		1800	
	FXL	kgf-m	44		82		99		134	
	FXL	kgf-m	126		152		268		268	
Allowable Work Inertia	$J=\frac{W \cdot D^2}{8}$	kg-m^2	0.25		0.54		1.17		2.3	
N.W.		kg	230		240		350		390	

DMTRT-170L

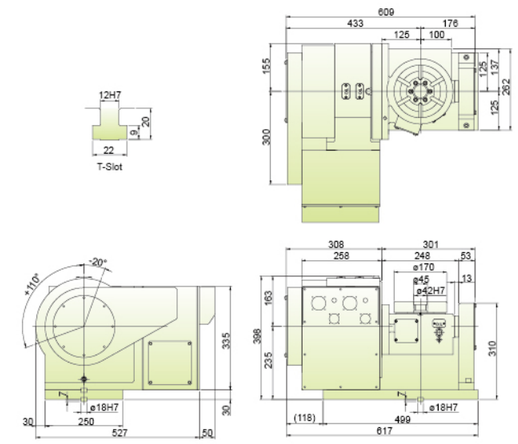

DMTRT-220L

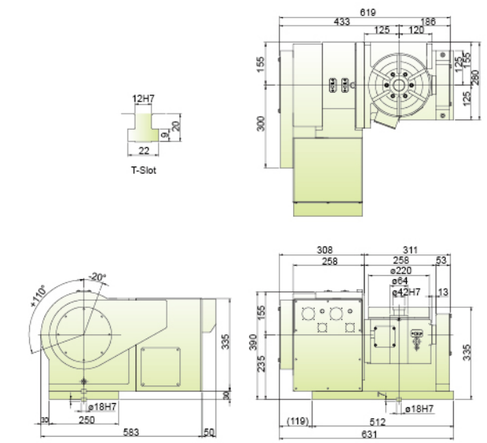

DMTRT-280L

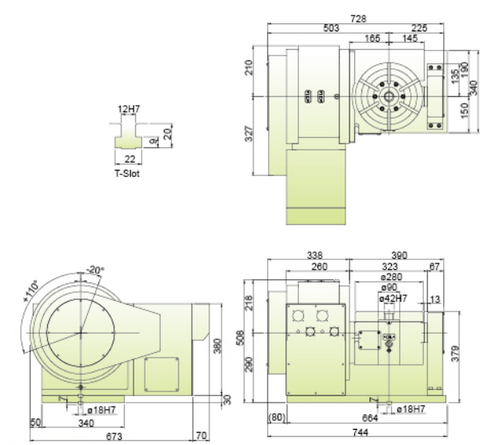

DMTRT-320L

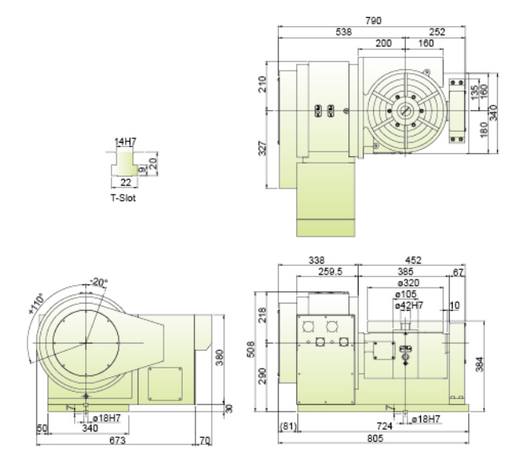

1. Please contact us for more detailed specification.
2. Parkson owns the rights to modify the drawing and specification.
3. Servo motors, drives. encoders, and hydraulic units are excluded.

FMH SERIES

Horizontal CNC RotaryTable
With 2 Pallets Series

FMHG SERIES

Horizontal Index Table With 2 Pallets Series

APC SERIES

Horizontal Auto Pallet Changer System

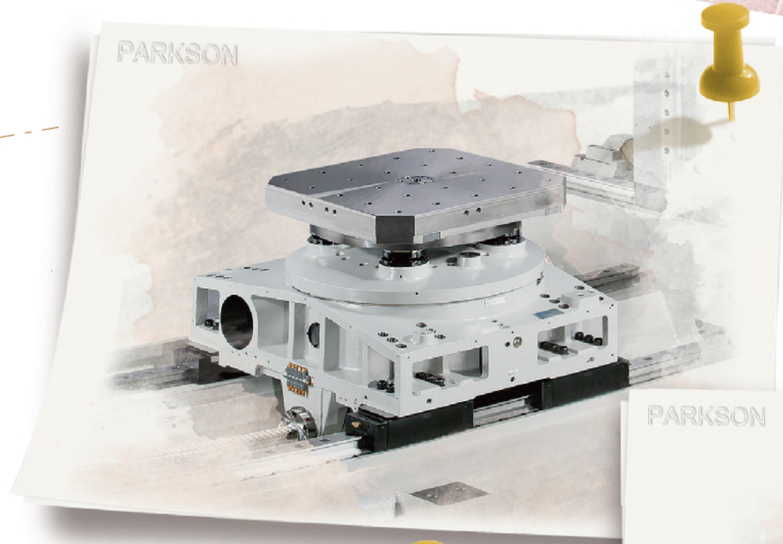

PARKSON

" Talent " is the main property of a company.

FMH SERIES

Horizontal CNC RotaryTable
With 2 Pallets Series

FMH-800ZP2

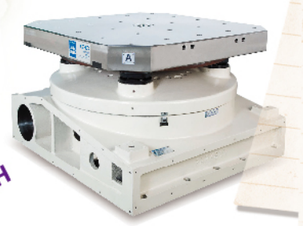

Product Feature

1. High accuracy and high rigidity.
2. Can be equipped with an encoder to achieve better positioning accuracy.
3. The 4th axis can be operated synchronously with machining tools.
4. Can be equipped with an APC to do pallets change automatically.
5. Applicable to the FMS (flexible machine system).

Model Classification

FMH - 800ZP2

- FMH → Horizontal CNC Rotary Table
- 800 → Table dimension 800x800mm
- Z → Interface type
  - X: Hard rail Z: Flatness
  - Y: Linear
- P2 → Two pallets included
- T → T-slot Pallet (Tapping hole is standard.)

Item \ Model	Unit	FMH-320P2	FMH-400P2	FMH-501P2	FMH-630P2	FMH-800P2	FMH-1010P2	FMH-1250P2
Pallet Diameter	mm	320x320	400x400	500 x 500	630 x 630	800 x 800	1000 x 1000	1250 x 1250
Spindle Hole Diameter	mm	Ø18H7	Ø55H7	Ø55H7	Ø55H7	Ø55H7	Ø55H7	Ø55H7
Overall Height in Horizontal	mm	360	387	380	480	530	590	610
Servo Motor (Optional) FANUC		α8i	α12i	α12i	α22i	α22i	α30i	α30i
Servo Motor (Optional) SIEMENS		1FK7063	1FK7063	1FK7083	1FK7101	1FK7101	1FK7105	1FK7105
Total Reduction Ratio		1 : 180	1 : 90	1 : 90	1 : 180	1 : 180	1 : 360	1 : 360
Max. Rotation Speed (Motor 2000min⁻¹)	r.p.m.	11.1	22.2	22.2	11.1	11.1	5.5	5.5
Min. Increment	deg.	0.001						
Indexing Accuracy	arc-sec	15	15	15	15	15	20	20
Repeatability Accuracy	arc-sec	6						
Clamping Torque	kgf-m	110	275	300	520	830	1450	1600
Hydraulic Pressure	kg/cm²	35	35	50	50	50	45	45
Permissible Cutting Force	kg-m	70	206	225	450	600	1080	1200
Max. Work Load	kg	300	400	500	1000	2000	4000	5000
N.W.	kg	300	320	560	1170	1350	2500	2800

FMH-400YP2

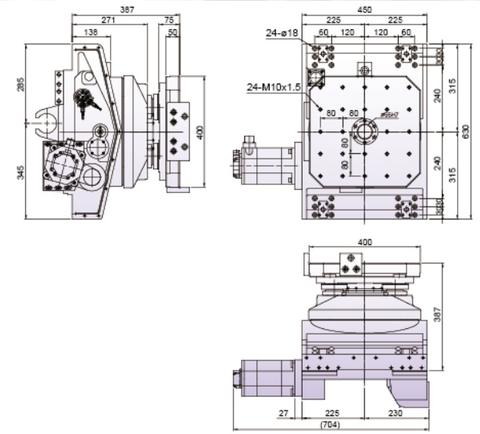

FMH-501ZP2

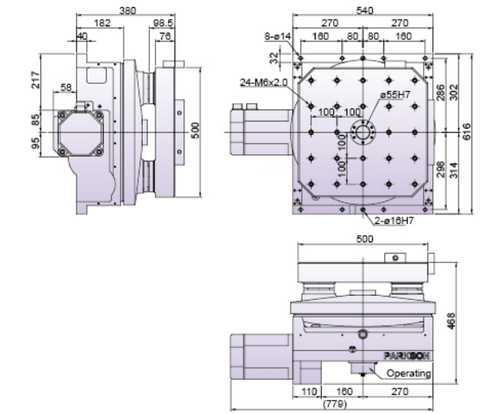

FMH-630ZP2

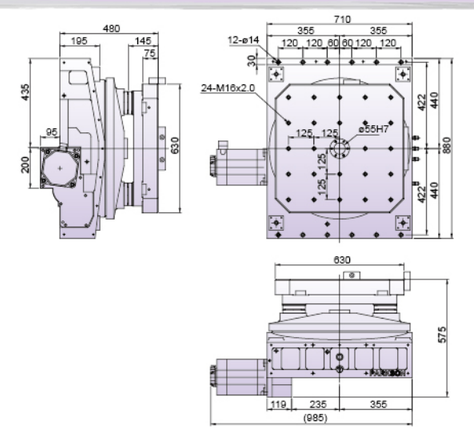

FMH-800YP2

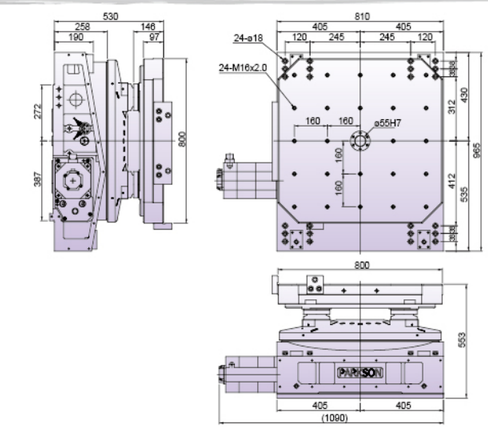

FMH-1010YP2T

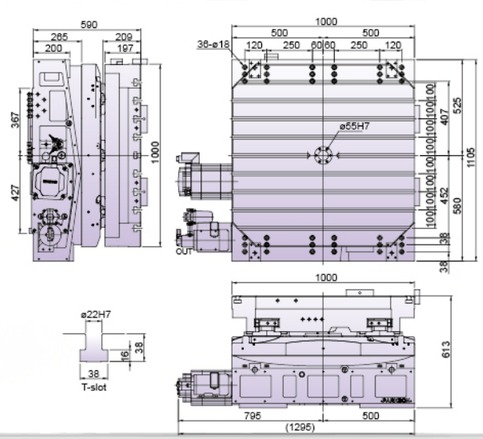

FMH-1250YP2T

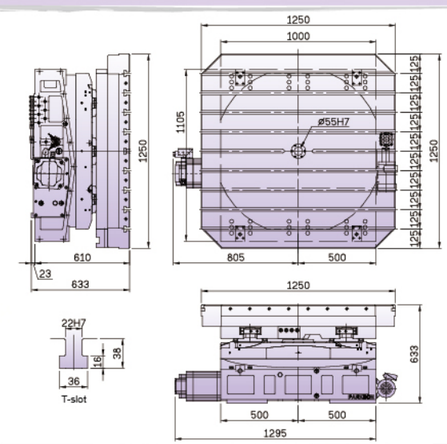

1. Please contact us for more detailed specification.
2. Parkson owns the rights to modify the drawing and specification.
3. Servo motors, drives, encoders, and hydraulic units are excluded.

FMHG SERIES

Horizontal Index Table With 2 Pallets Series

FMHG-800BP2

Product Feature

1. High accuracy and high rigidity.
2. Precise positioning by coupling gears.
3. Can be equipped with an APC to do pallets change automatically.
4. Applicable to the FMS(flexible machine system).

Model Classification

FMHG - 500ZP2

- FMHG → Horizontal Index Table
- 500 → Table dimension 500x500mm
- Z → Interface type
  - X: Hard rail Y: Linear
  - Z: Flatness
- P2 → Two pallets included
- T → T-slot Pallet (Tapping hole is standard.)

Item \ Model		Unit	FMHG-320P2	FMHG-400P2	FMHG-500P2	FMHG-630P2	FMHG-800P2	FMHG-1010P2	FMHG-1250P2
Pallet Diameter		mm	320 x 320	400 x 400	500 x 500	630 x 630	800 x 800	1000 x 1000	1250 x 1250
Spindle Hole Diameter		mm	Ø18H7	Ø55H7	Ø55H7	Ø55H7	Ø55H7	Ø55H7	Ø55H7
Overall Height in Horizontal		mm	360	380	380	480	530	590	610
Servo Motor (Optional)	FANUC		α8i	α8i	α8i	α22i	α22i	α22i	α30i
	SIEMENS		1FK7063	1FK7063	1FK7063	1FK7083	1FK7101	1FK7101	1FK7105
Total Reduction Ratio			1 : 120	1 : 120	1 : 120	1 : 180	1 : 180	1 : 360	1 : 360
Max. Rotation Speed (Motor 2000min^{-1})		r.p.m.	16.7	16.7	16.7	11.1	11.1	5.5	5.5
Min. Increment		deg.	1						
Indexing Accuracy		arc-sec	10						
Repeatability Accuracy		arc-sec	2						
Clamping Torque		kgf-m	420	600	600	860	1050	1450	3560
Hydraulic Pressure		kg/cm²	35	50	50	50	50	50	50
Permissible Cutting Force		kg-m	315	450	450	650	790	1080	2670
Max. Work Load		kg	300	400	500	1200	2000	3000	4000
N.W.		kg	350	515	535	1180	1450	2150	2980

1. Please contact us for more detailed specification.
2. Parkson owns the rights to modify the drawing and specification.
3. Servo motors, drives. encoders, and hydraulic units are excluded.

FMHG-400ZP2

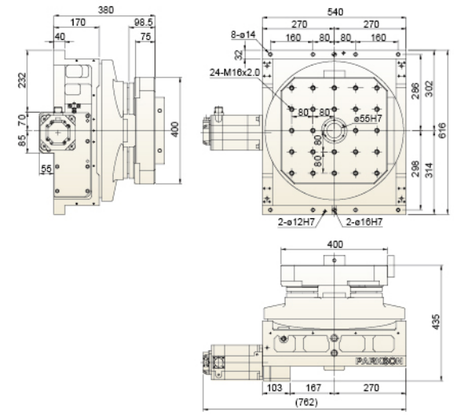

FMHG-500YP2

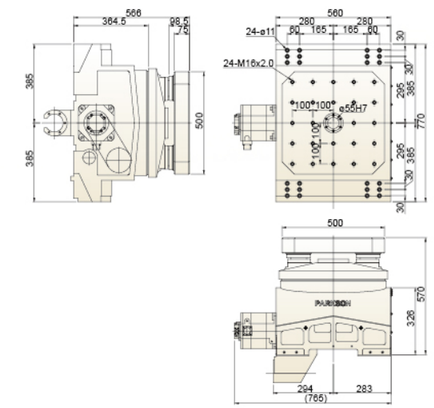

FMHG-630YP2

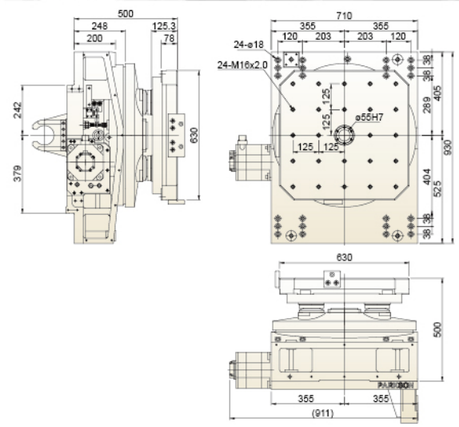

FMHG-800YP2

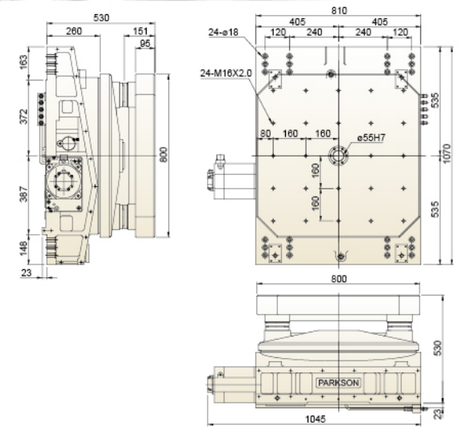

FMHG-1010YP2

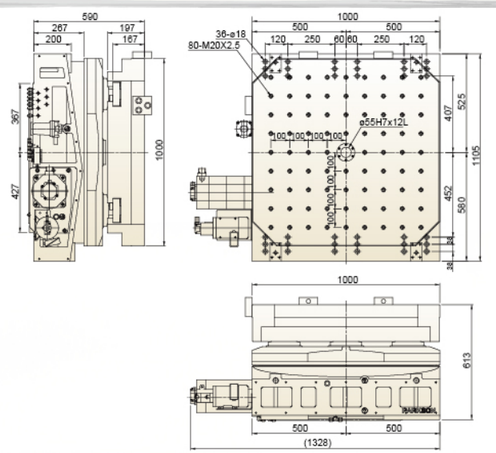

FMHG-1250YP2T

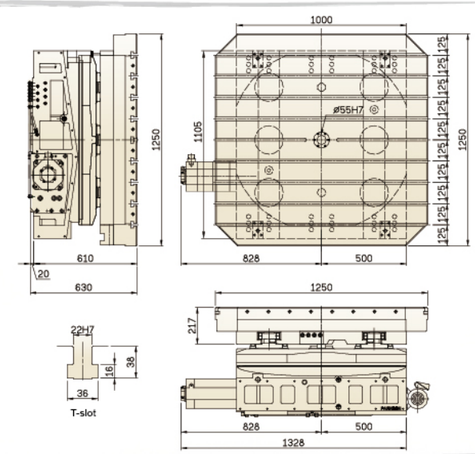

APC SERIES

Vertical Auto Pallet Changer System

APC-HS500

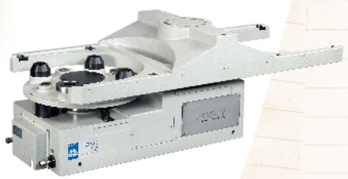

Product Feature

1. High accuracy and high efficiency.
2. Use a servo motor or hydraulic gear to do hydraulic transmission.
3. Fixed position with tapper cone to clamp the pallet.

Model Classification

APC-HS500

APC → Auto Pallet Changer System

HS → Table type
- T: On the top
- H: On the bottom (Driven by hydraulic gear)
- HS: On the bottom (Driven by Servo Motor)

500 → Table dimension 500x500 mm

Item \ Model	Unit	APC-HS502	APC-T501	APC-H630	APC-HS800
Pallet Diameter	mm	500 x 500	500 x 500	630 x 630	800 x 800
Transmission Way		Driven By Servo Motor(Driven By Hydraulic Rack)			
Exchange Way		Reciprocating Action (180°)			
Servo motor (Optional)	FANUC	α12i	–	–	α22i
	MELDAS	HF-204S	–	–	HF-354S
Total Reduction Ratio		1 : 120	–	–	1 : 120
Exchange Time (Servo Motor)	sec.	12		16	18
Exchange Time (Hydraulic Gear)	sec.	14		18	20
Ascending and Descending Travel of The Pallet	kg/cm²	50	35	50	50
Ascending and Descending Travel of The Pallet	mm	60	60	55	70
Bilateral of Work Max. Weight Error	kg	400	400	1000	1400
Max. Work Load (W W)	kg	500x2=1000	500x2=1000	1200x2=2400	2000x2=4000
Weight of Rotary Exchange Mechanism(Including Tray)	kg	340	320	1055	1550
Weight of 2 Pallets	kg	120x2=240	120x2=240	242x2=484	360x2=720
Weight of Preset Working Table	kg	65	65	138	350

APC-T501

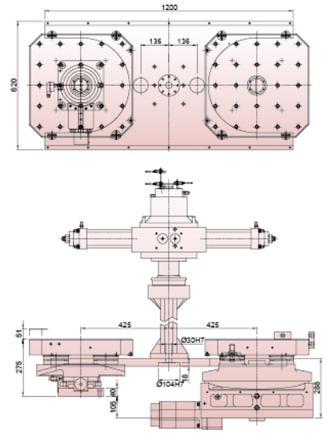

APC-H502

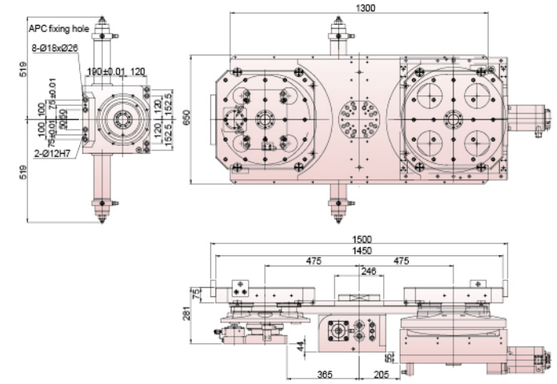

APC-HS502

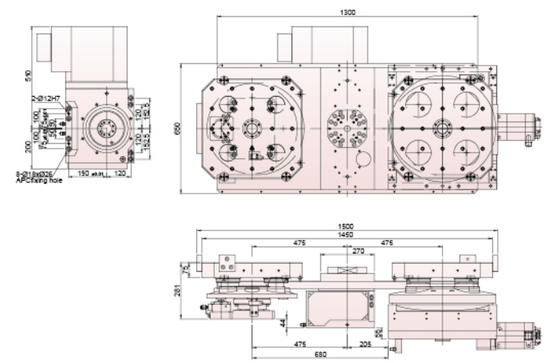

APC-H630

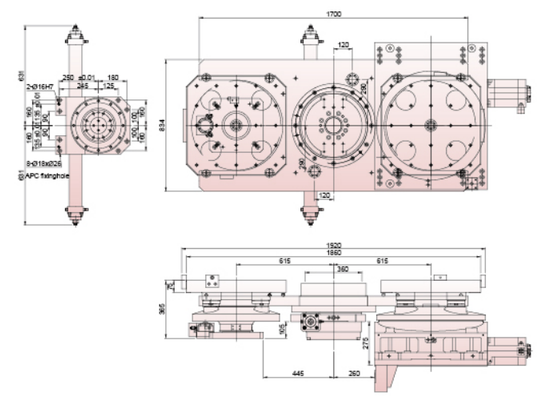

APC-HS630

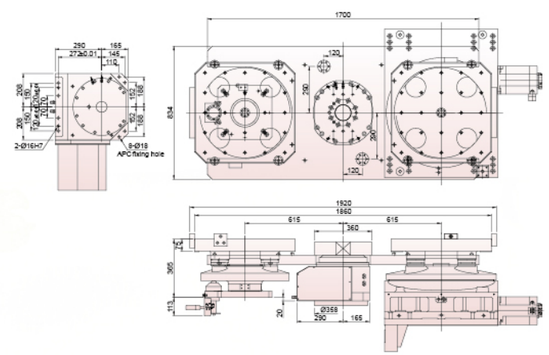

APC-HS800

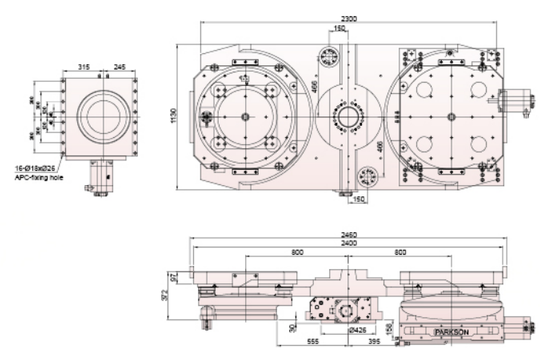

1. Please contact us for more detailed specification.
2. Parkson owns the rights to modify the drawing and specification.
3. Servo motors, drives, encoders, and hydraulic units are excluded.

APC SERIES

Vertical Auto Pallet Changer System

APC-4060

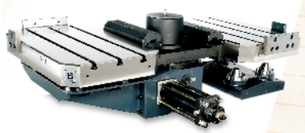

Product Feature

1. High accuracy and high efficiency.
2. Use a servo motor or hydraulic gear to do hydraulic transmission.
3. Fixed position with tapper cone to clamp the pallet.

Model Classification

APC - 4060(_)

- APC → Auto Pallet Changer System
- 4060 → Table dimension 600x400mm
- (_) → Interface type :
  - Y : Linear
  - Z : Flatness

Transmission way :
- G : Driven by hydraulic gear
- S : Driven by Servo Motor

Item / Model	Unit	APC-4056	APC-4072	APC-5070	APC-4060	APC-96120
Pallet Diameter	mm	400 x 560	400 x 720	500 x 700	400 x 600	900 x 1200
Transmission Way		Driven By Servo Motor (Hydraulic Rack Drive)			Hydraulic Rack Drive	
Servo motor (Optional)	FANUC	α12i			–	
	MELDAS	HF-204S				
Exchange Way		Reciprocating Action (180°)				
Ascending and Descending Drive(Hydraulic)	kg/cm²	35				
Ascending and Descending Travel of The Pallet	mm	60				–
The Thrust Force to Ascend	kg	970				–
Clamping Force	kgf-m	550x4 = 2200				7500
Max. Work Load of Pallet (W W)	kg	200x2 = 400		250x2 = 500	200x2 = 400	500x2 = 1000
Indexing Way		Oblique Tapper Cone Localization				–
Hydraulic pressure	kg/cm²	35				
N.W.	kg	–				1210
Weight of Rotary Exchange Mechanism	kg	180	180	190	379	–
Weight of 2 Pallets	kg	95x2 = 190	110x2 = 220	140x2 = 280	126x2 = 252	–
Weight of Locking Base	kg	105	105	120	75	–

APC-4072ZS(4056ZS,5070ZS)

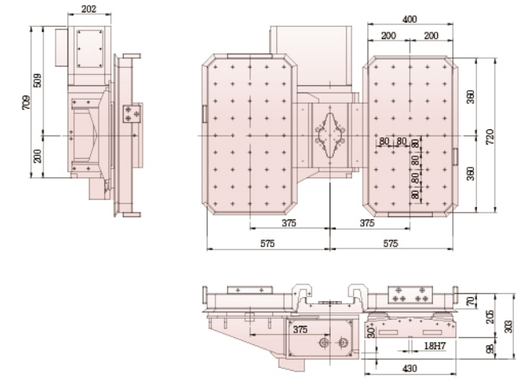

APC-4072YS(4056YS,5070YS)

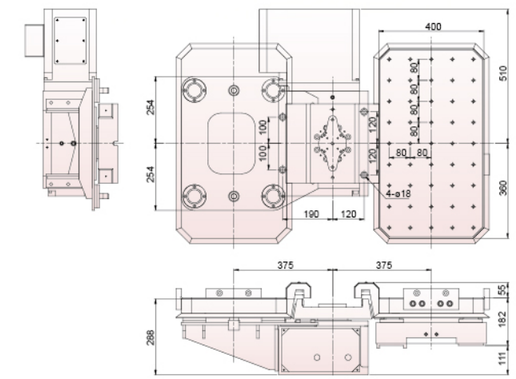

APC-4060

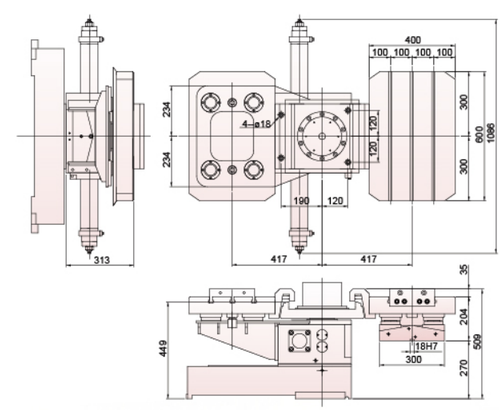

APC-96120

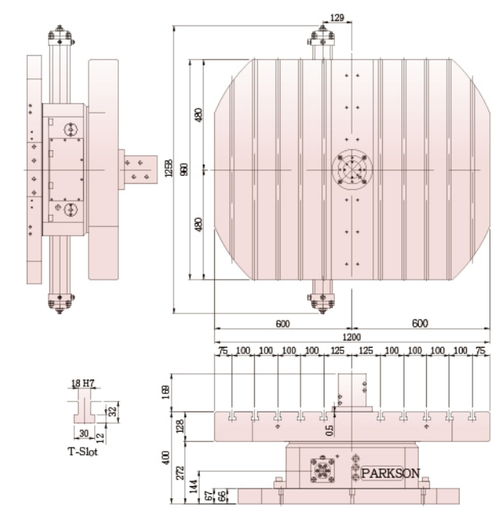

1. Please contact us for more detailed specification.
2. Parkson owns the rights to modify the drawing and specification.
3. Servo motors, drives. encoders, and hydraulic units are excluded.

HMC SERIES
Horizontal CNC Rotary Table

HMD SERIES
Horizontal CNC Rotary Table

HMG SERIES
Horizontal Index Table

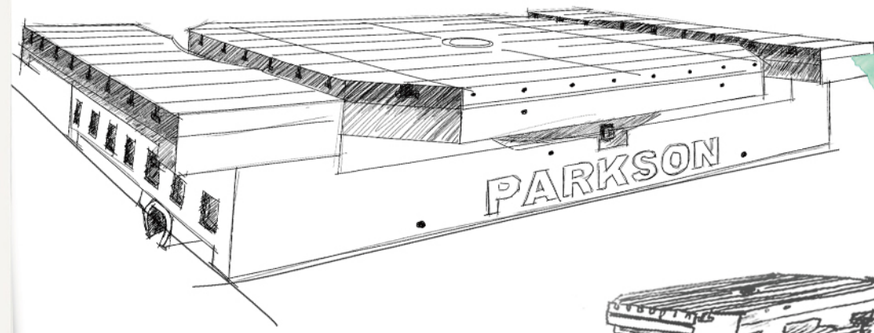

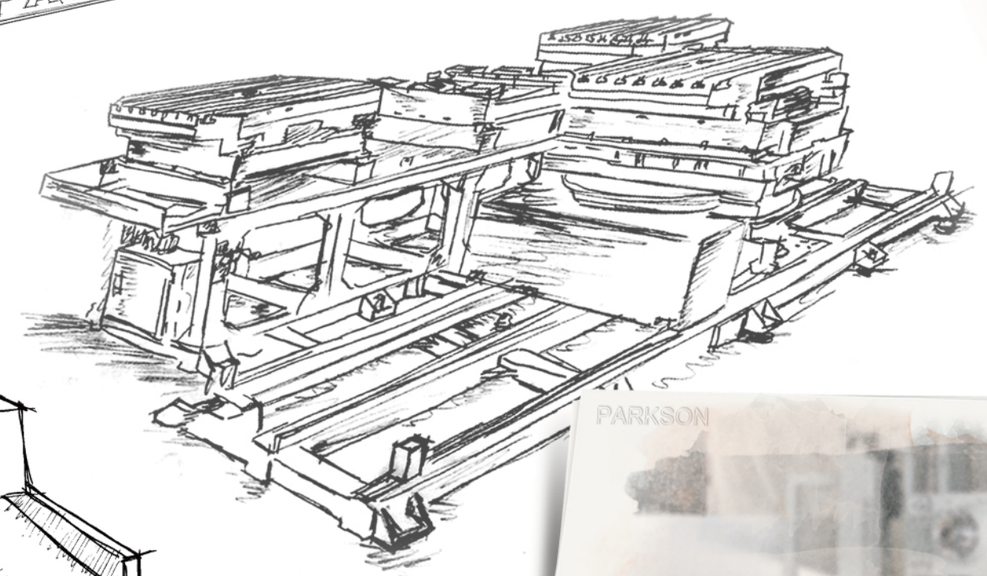

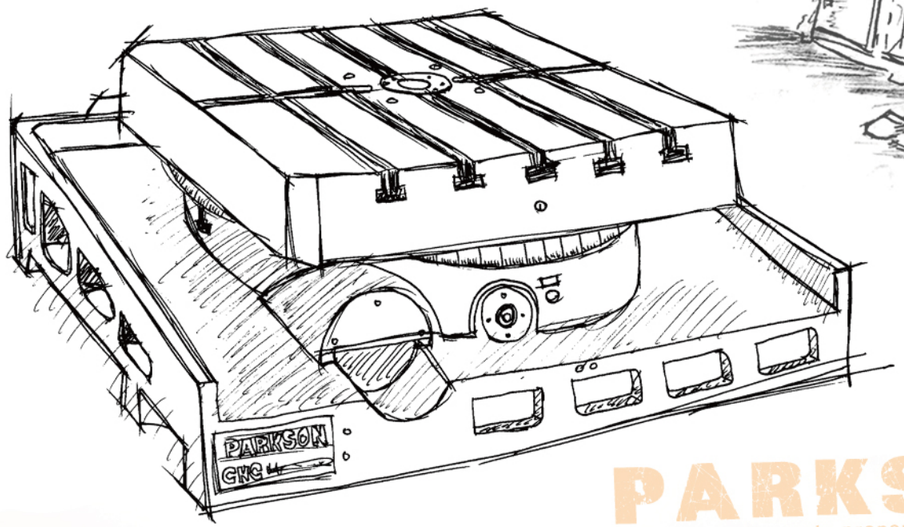

PARKSON

" Talent " is the main property of a company.

HMC SERIES

Horizontal CNC Rotary Table

HMC-1820S

Product Feature

1. Applicable for horizontal boring & milling machines.
2. Hydraulic clamping system, can do heavy duty by 90 degrees.
3. Can do cutting and processing synchronously.
4. Can be cooperated with OEM/ODM.

Model Classification

HMC-1820 _

- HMC → Horizontal Index Table
- 1820 → Table dimension 1800x2000mm
- X → Interface type
  - X: Hard rail Y: Linear
  - Z: Flatness
  - T: T-slot Pallet (Tapping hole is standard.)

Item \ Model	Unit	HMC-500	HMC-630	HMC-800	HMC-1416	HMC-1820	HMC-2020
Pallet Diameter	mm	500x500	630x630	800x800	1400x1600	1800x200	2000x2000
Spindle Hole Diameter	mm	Ø50H7x15L	Ø50H7x15L	Ø50H7x15L	Ø140H7x12L	Ø160H7x12L	Ø160H7x12L
Overall Height in Horizontal	mm	295	330	360	495	650	650
Width of T-slot	mm	–	–	–	24H7	28H7	28H7
Servo motor (Optional)	FANUC	α12i	α22i	α30i	α30i	α30i	α30i
	SIEMENS	1FK7083	1FK7083	1FK7105	1FK7105	1FK7105	1FK7105
Servo Motor Max. Rotation Speed	r.p.m.	2000	2000	2000	1000	720	720
Total Reduction Ratio		1:180	1:180	1:180	1:360	1:720	1:720
Max. Rotation Ratio	r.p.m.	11.1	11.1	11.1	2.8	1	1
Min. Increment	deg.	0.001					
Indexing Accuracy	arc-sec	15	15	15	20	20	20
Repeatability Accuracy	arc-sec	4	6	6	6	6	6
Clamping Torque	kgf-m	335	680	830	1150	1235	1430
Hydraulic Pressure	kg/cm²	35	35	35	35	50	50
Permissible Cutting Force	kgf-m	250	380	700	865	930	1075
Max. Work Load	kg	600	1200	2500	8500	15000	15000
N.W.	kg	520	670	1175	4300	9000	9600

1. Please contact us for more detailed specification.
2. Parkson owns the rights to modify the drawing and specification.
3. Servo motors, drives. encoders, and hydraulic units are excluded.

HMC-500Z

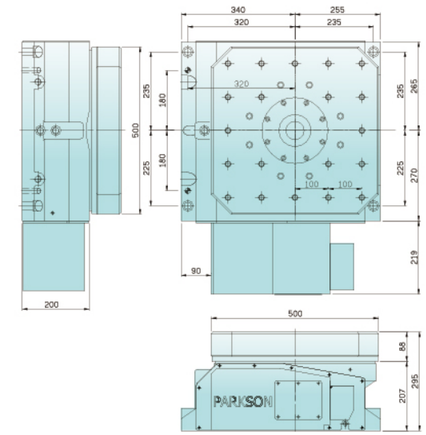

HMC-630Z

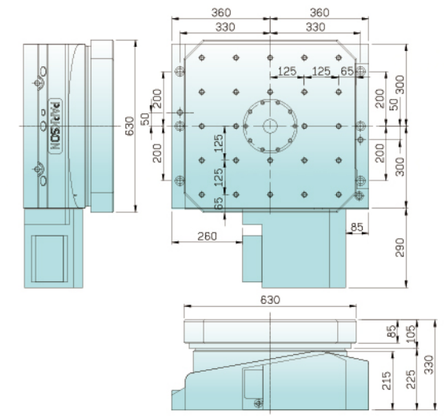

HMC-800Z

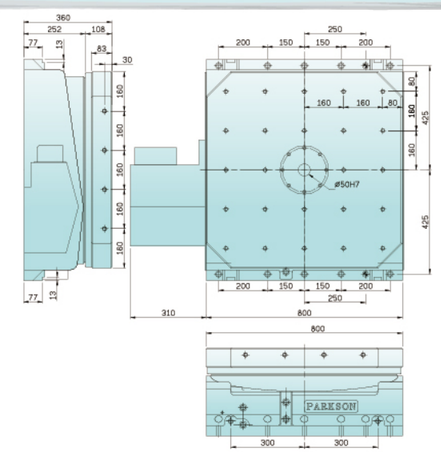

HMC-1416XT

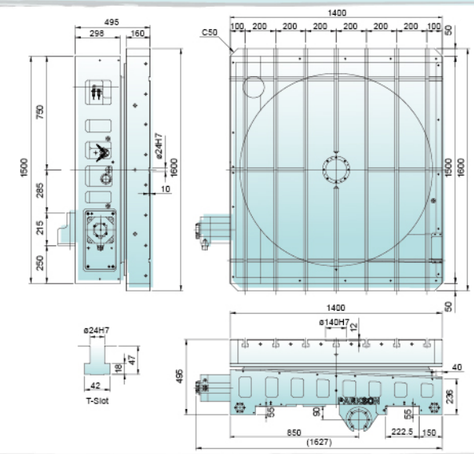

HMC-1820ZT

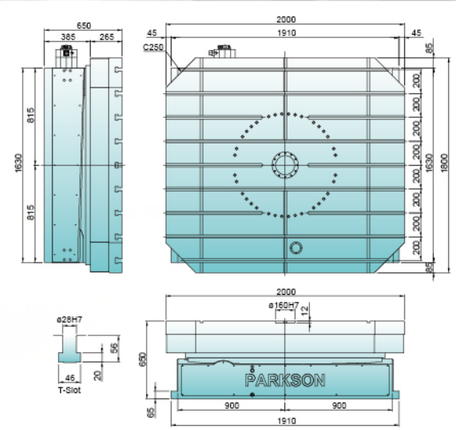

HMC-2020ZT

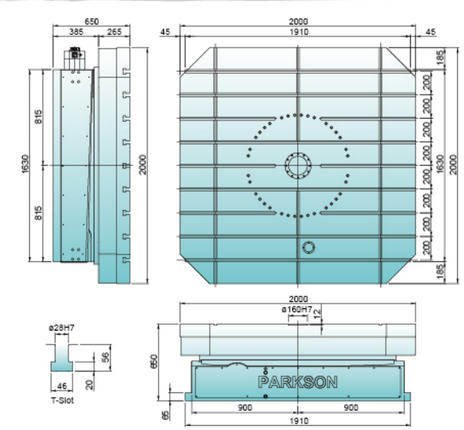

HMD SERIES

Horizontal CNC Rotary Table

HMD-1416XT

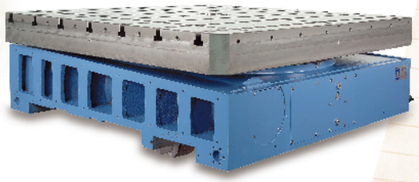

Product Feature

1 · Applicable for horizontal boring & milling machines.
2 · Hydraulic clamping system, can do heavy duty by 90 degrees.
3 · Can do cutting and processing synchronously.
4 · Can be cooperated with OEM/ODM.

Model Classification

HMD-1416XT

HMD → Horizontal CNC Rotary Table
1416 → Table dimension 1400x1600 mm
XT → Interface type
X: Hard rail Y: Linear
Z: Flatness
T: T-slot Pallet (Tapping hole is standard.)

Item \ Model	Unit	HMD-1250	HMD-1416	HMD-1820	HMD-2525
Pallet Diameter	mm	1250x1250	1400x1600	1800x2000	2500x2500
Spindle Hole Diameter	mm	Ø140H7x12L	Ø140H7x20L	Ø140H7x20L	Ø140H7x12L
Overall Height in Horizontal	mm	395	400	580	700
Width of T-slot	mm	22H7	24H7	28H7	28H7
Servo motor (Optional)	FANUC	α30i			α40i
	SIEMENS	1FK7105			
Servo Motor Max. Rotation Speed	r.p.m.	1000	1600	1000	1200
Total Reduction Ratio		1:400	1:800	1:1000	1:1200
Max. Rotation Ratio	r.p.m.	2.5	2.0	1.0	1.0
Min. Increment	deg.	0.001			
Indexing Accuracy (with encoder)	arc-sec	10			
Repeatability Accuracy	arc-sec	6			
Clamping Torque	kgf-m	800	1750	2450	3450
Hydraulic Pressure	kg/cm^2	50	50	50	50
Permissible Cutting Force	kgf-m	640	1220	1720	2588
Max. Work Load	kg	5000	8500	15000	20000
N.W.	kg	2200	3300	9300	18000

HMD-1250XT

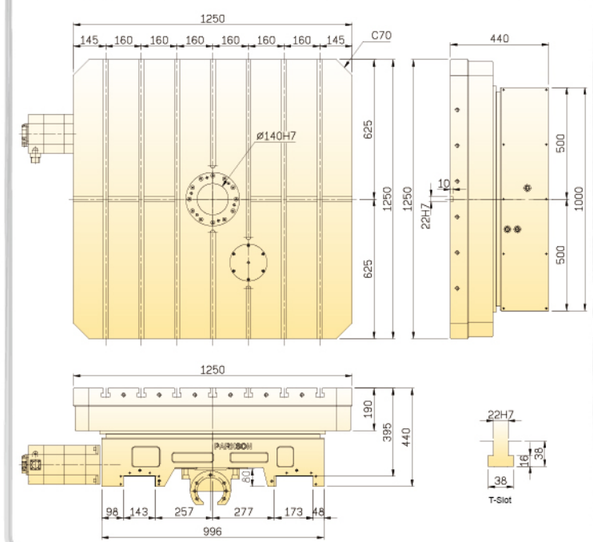

HMD-1416XT

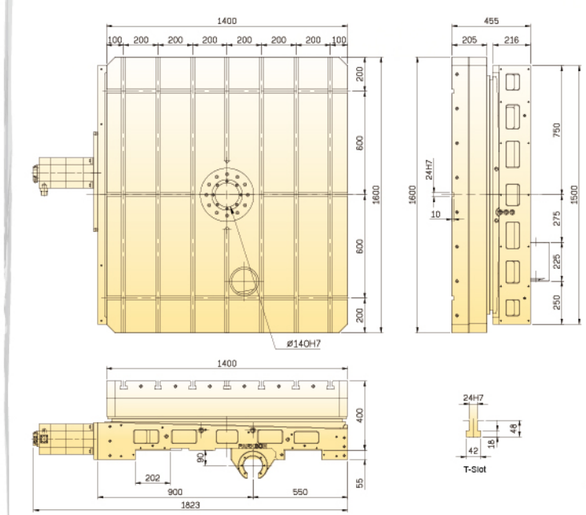

HMD-1820XT

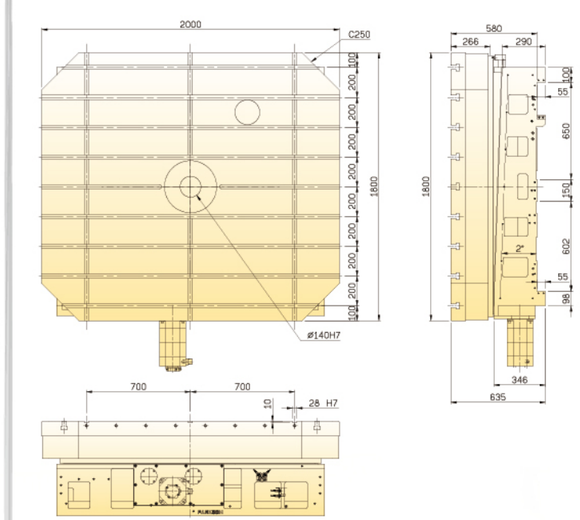

HMD-2525XT

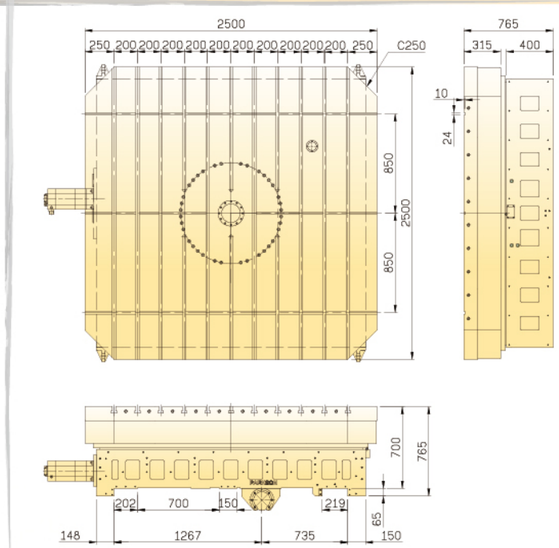

1. Please contact us for more detailed specification.
2. Parkson owns the rights to modify the drawing and specification.
3. Servo motors, drives. encoders, and hydraulic units are excluded.

HMG SERIES

Horizontal Index Table

HMG-1212

Product Feature

1. Applicable for horizontal machining centers.
2. Hydraulic clamping system; can do heavy duty.
3. Precise positioning by coupling gears.
4. Can be cooperated with OEM/ODM.

Model Classification

HMG-631T

- HMG → Horizontal Index Table
- 630 → Table dimension 630x630mm
- 1 → Edition
- T → Interface type
  - X: Hard rail Y: Linear
  - Z: Flatness
  - T: T-slot Pallet (Tapping hole is standard.)

Item \ Model	Unit	HMG3-501	HMG-631	HMG-801	HMG3-1010
Pallet Diameter	mm	500x500	630x630	800x800	1000x1000
Spindle Hole Diameter	mm	Ø55H7			
Overall Height in Horizontal	mm	310	320	380	400
Width of T-slot	mm	–	20H7	22H7	22H7
Width of Guide Block	mm	–	22H7	–	–
Servo motor (Optional)	FANUC	α12i	α12i	α22i	α30i
	SIEMENS	1FK7083	1FK7083	1FK7101	1FK7105
Total Reduction Ratio		1:90	1:180	1:180	1:360
Max. Rotation Speed (Motor 2000min^{-1})	r.p.m.	22.2	11.1	11.1	5.6
Min. Increment	deg.	1			
Indexing Accuracy	arc-sec	10			
Repeatability Accuracy	arc-sec	2			
Clamping Torque	kgf-m	1560	3200	3600	6500
Hydraulic Pressure	kg/cm²	50	50	50	50
Permissible Cutting Force	kgf-m	1170	2400	2700	4875
Max. Work Load	kg	500	1500	3000	5000
N.W.	kg	450	900	1285	1950

HMG3-501Z

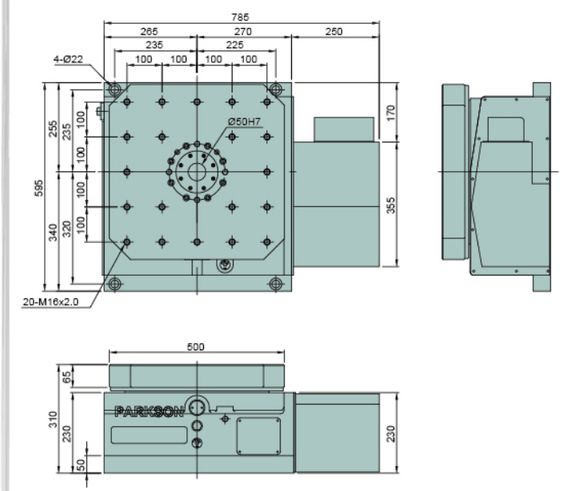

HMG-631ZT

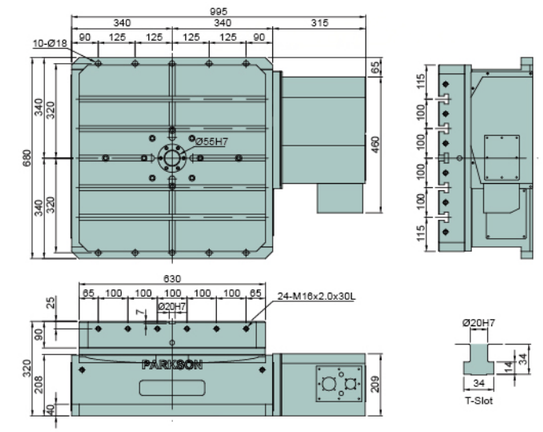

HMG-801T

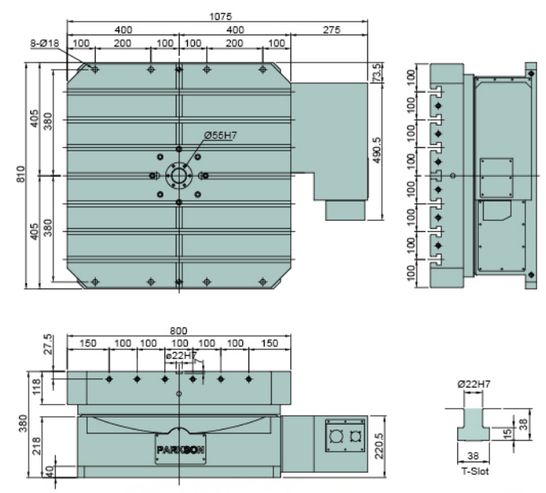

HMG3-1010T

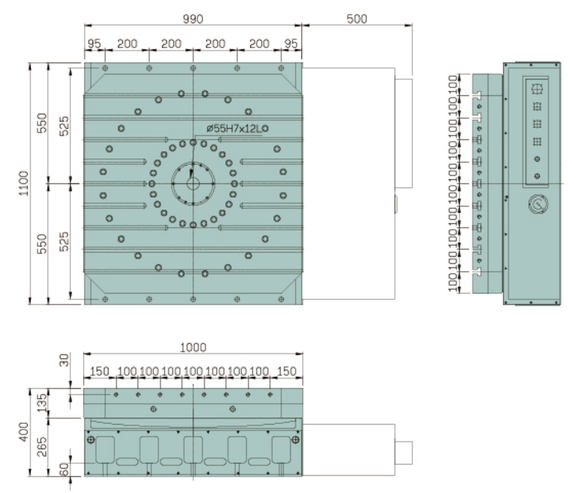

1. Please contact us for more detailed specification.
2. Parkson owns the rights to modify the drawing and specification.
3. Servo motors, drives. encoders, and hydraulic units are excluded.

VLHI SERIES

Hydraulic Index Table

VLHI-350

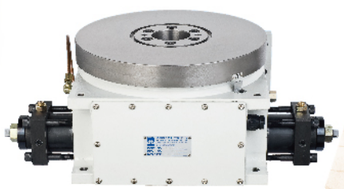

Product Feature

1. High accuracy and high rigidity.
2. Can turn clockwise and counter-clockwise. Low failure rate.
3. Applicable to round plate type special purpose machines and cutting machining centers.

Model Classification

VLHI - 350

VLHI → Hydraulic Index Table

Ø350 → Table diameter

Item \ Model		Unit	VLHI-201	VLHI-251	VLHI-350	VLHI-501	VLHI-601	VLHI-800
Table Diameter		mm	Ø200	Ø250	Ø350	Ø500	Ø600	Ø800
Spindle Hole Diameter		mm	Ø30H7	Ø30H7	Ø70H7	Ø130H7	Ø110H7	Ø70H7
Through Hole Diameter		mm	Ø30	Ø30	Ø40	Ø61	Ø65	–
Overall Height in Vertical		mm	303	303	407	525	–	–
Overall Height in Horizontal		mm	175	175	220	235	260	340
Division Number	Standard		4、6、8、12、24 Division (Alternative)					
	Special		2、3、5、9、10. . . . . Special orders by customization					
Indexing Accuracy		arc-sec	8		10			
Rotation Direction			CW or CCW					
Max. Rotation Torque		kg-m	25	25	60	80	100	300
Max. Sub-plate Diameter		mm	Ø550	Ø550	Ø700	Ø900	Ø1200	Ø1500
Max. Work Load	Normal	kg	70		200	300	600	1200
	Low Speed	kg	120		500	600	1200	2000
Permissible Instant Inertia(GD2)		kg-m^2	35	35	90	180	500	800
Clamping Force		kg/cm^2	1100	1100	1350	3000	7600	4000
Operating Pressure		kg/cm^2	30	30	25	30	35	35
Table Application		kg	Vertical or Horizontal				Horizontal	
N.W.		kg	50	63	140	265	460	820

1. Please contact us for more detailed specification.
2. Parkson owns the rights to modify the drawing and specification.
3. Servo motors, drives. encoders, and hydraulic units are excluded.

VLHI-201

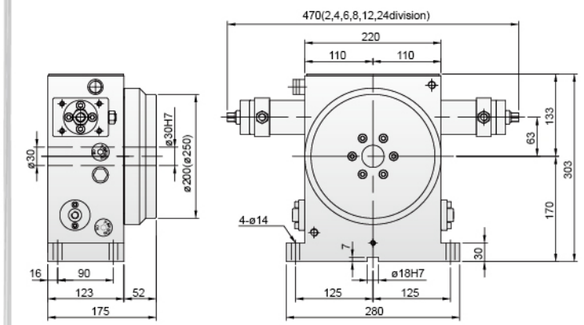

VLHI-251M

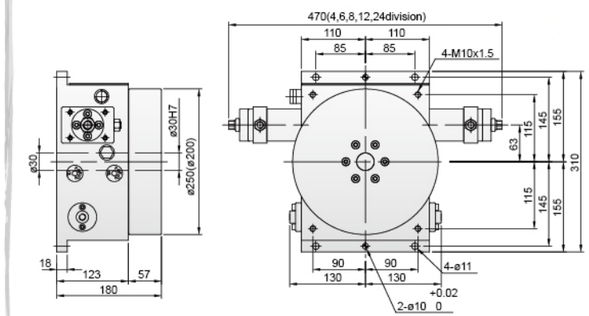

VLHI-350

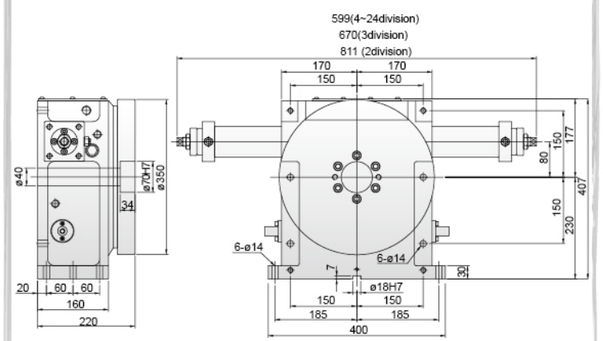

VLHI-501

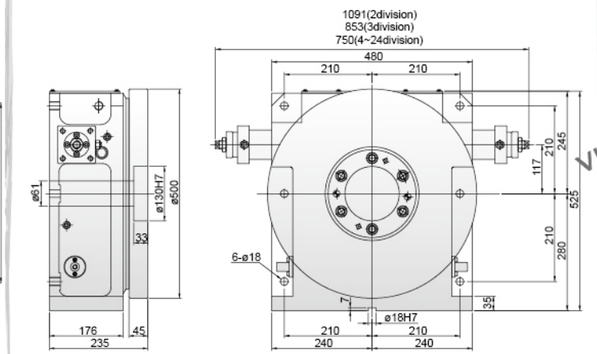

VLHI-601M

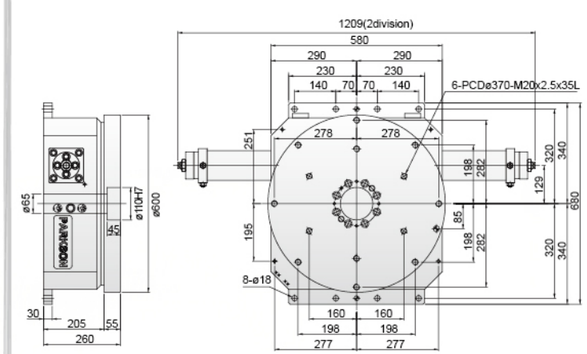

VLHI-800M

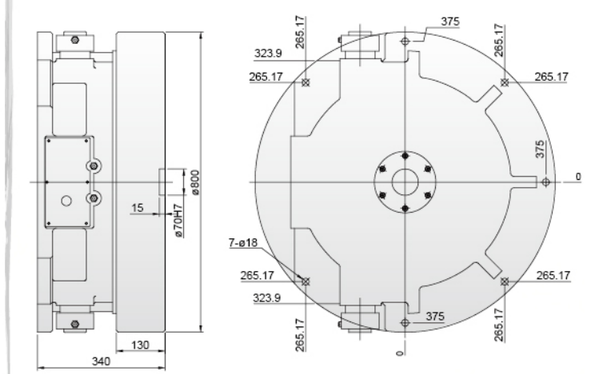

Accuracy Standard

Model \ Item	Unit	Center concentricity	Perpendicularity between table top and frame bottom	Parallelism between center line of test bar and key way	Table top of warping /rotation	Parallelism between table top and frame bottom	Table top flatness
Measuring Method		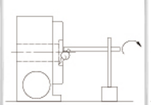	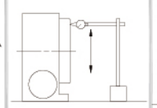	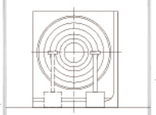	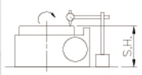	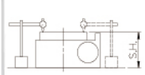	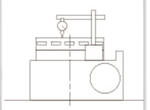
MNC-130	mm	0.01	0.02	0.02	0.015	0.02	0.01
MNC-171	mm	0.01	0.02	0.02	0.015	0.02	0.01
MNC-220	mm	0.01	0.02	0.02	0.015	0.02	0.01
MNC-280	mm	0.01	0.02	0.02	0.015	0.02	0.01
MNC-320	mm	0.01	0.02	0.02	0.015	0.02	0.01
MNC-401	mm	0.01	0.02	0.02	0.015	0.02	0.015
MNC-500	mm	0.01	0.02	0.02	0.015	0.02	0.02
MNC-631	mm	0.01	0.02	0.02	0.015	0.02	0.02
MNC-800	mm	0.01	0.02	0.02	0.02	0.025	0.025
MNC-1000	mm	0.01	0.03	0.02	0.02	0.03	0.03
MNC-1200	mm	0.01	0.03	0.02	0.02	0.03	0.03

1. Please contact us for more detailed specification.
2. Parkson owns the rights to modify the drawing and specification.
3. Servo motors, drives. encoders, and hydraulic units are excluded.

Model \ Item	Unit	Center concentricity	Flatness of table top	Parallelism between table top and frame bottom	Run-out of table top
Measuring Method		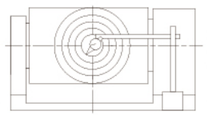	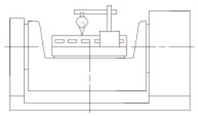	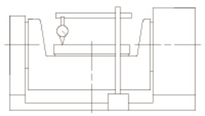	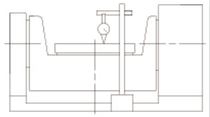
PAR-131	mm	0.01	0.01	0.015	0.015
PAR-170	mm	0.01	0.01	0.015	0.015
PAR-251	mm	0.01	0.01	0.015	0.015
PAR-320	mm	0.01	0.01	0.015	0.015
PAR-400	mm	0.015	0.015	0.02	0.015
PAR-352	mm	0.01	0.01	0.015	0.015
PAR-403	mm	0.015	0.015	0.02	0.02
PAR-500	mm	0.02	0.02	0.02	0.02
PAR-501	mm	0.02	0.02	0.02	0.02
PAR-510	mm	-	0.02	0.02	0.02
PAR-630	mm	0.02	0.02	0.02	0.02
Measuring Method	Unit	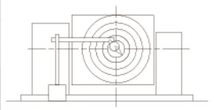	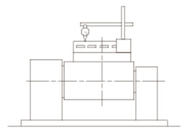	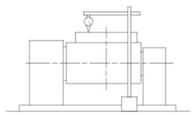	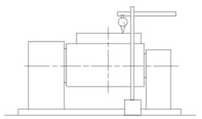
DMTRT-170	mm	0.01	0.01	0.015	0.015
DMTRT-220	mm	0.01	0.01	0.015	0.015
DMTRT-280	mm	0.01	0.01	0.015	0.015
DMTRT-320	mm	0.01	0.01	0.015	0.015

Accuracy Standard

Model \ Item	Unit	Pivot Concentricity between table and pallet	Run out of the pallet revolution	Parallelism between pallet top and table	Accuracy of pallet top
Measuring Method		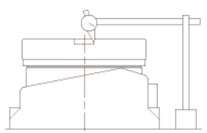	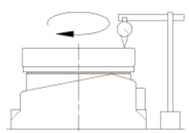	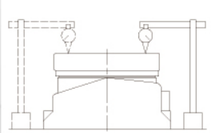	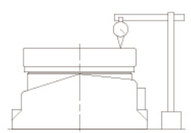
HMC-500	mm	0.01	0.02	0.015	0.015
HMC-630	mm	0.01	0.02	0.02	0.02
HMC-800	mm	0.01	0.03	0.03	0.03
HMC-1416	mm	0.01	0.02	0.04	0.03
HMC-1820	mm	0.01	0.03	0.05	0.05
HMC-2020	mm	0.01	0.03	0.05	0.05
HMD-1250	mm	0.01	0.02	0.04	0.03
HMD-1416	mm	0.01	0.02	0.04	0.03
HMD-1820	mm	0.01	0.03	0.05	0.05
HMD-2525	mm	0.015	0.04	0.05	0.05
HMG3-501	mm	0.01	0.015	0.015	0.015
HMG-631	mm	0.01	0.015	0.02	0.02
HMG-801	mm	0.01	0.015	0.03	0.03
HMG3-1010	mm	0.01	0.015	0.03	0.03

1. Please contact us for more detailed specification.
2. Parkson owns the rights to modify the drawing and specification.
3. Servo motors, drives. encoders, and hydraulic units are excluded.

Model \ Item	Unit	Pivot Concentricity between table and pallet	Run out of the pallet revolution	Parallelism between pallet top and table	Accuracy of pallet top
Measuring Method		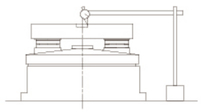	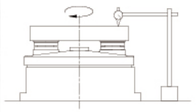	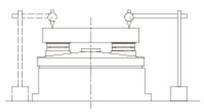	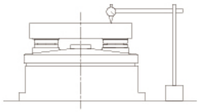
FMH-401/501	mm	0.01	0.015	0.015	0.015
FMH-630	mm	0.01	0.015	0.02	0.02
FMH-800	mm	0.01	0.015	0.03	0.03
FMH-1000	mm	0.01	0.015	0.04	0.03
FMHG-400/500	mm	0.01	0.015	0.015	0.015
FMHG-630	mm	0.01	0.015	0.02	0.02
FMHG-800	mm	0.01	0.015	0.03	0.03
FMHG-1000	mm	0.01	0.015	0.04	0.03
FMHG-1250	mm	0.01	0.015	0.04	0.03

Model \ Item	Unit	Run out of the pallet revolution	Table Straightness	Parallelism between plate top and table bottom
Measuring Method		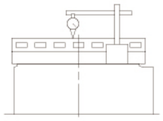	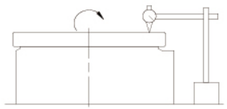	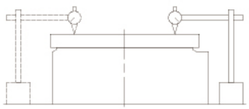
VLHI-201	mm	0.02	0.02	0.02
VLHI-250	mm	0.02	0.02	0.02
VLHI-350	mm	0.02	0.02	0.02
VLHI-500	mm	0.02	0.02	0.02
VLHI-600	mm	0.02	0.02	0.03
VLHI-601	mm	0.02	0.02	0.03
VLHI-800	mm	0.02	0.02	0.03

ALL SERIES

SNC-15

SNC-55

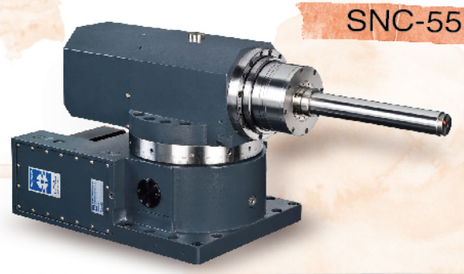

STR-500

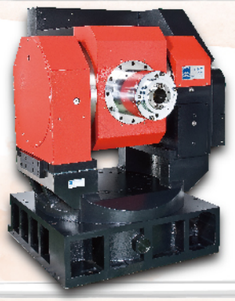

MNC-1515R

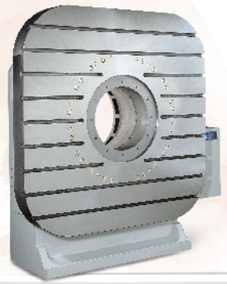

MNC-3000R

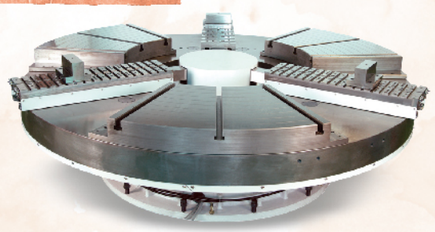

MTD-170

PARS-353BRH

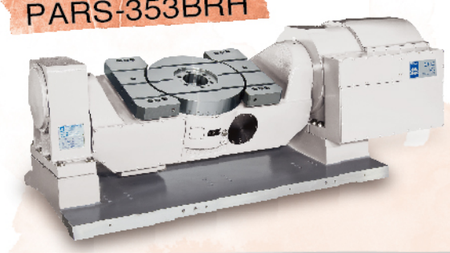

PARS-502REP2

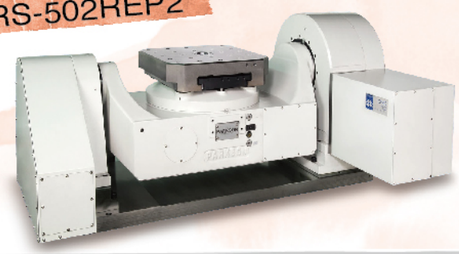

FMH-800P2

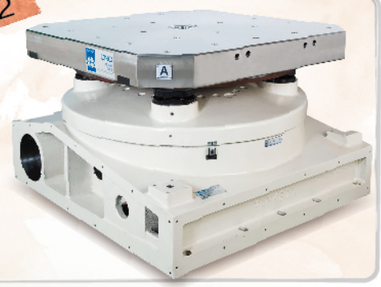

FMHG-631AP2T

HMCD-600

Max. Rotation Speed:120 r.p.m.

HMC-800E-H12

APCR-500P6

APC-P1250P3

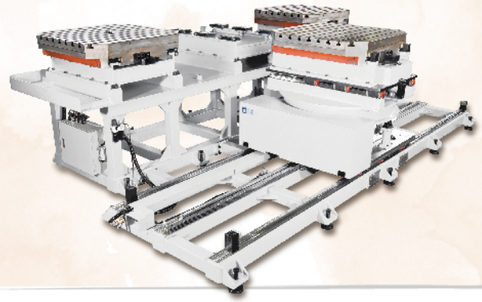

New HMCD-1650

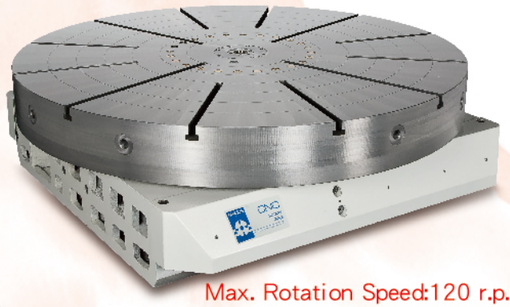

Max. Rotation Speed:120 r.p.m.

New APCL-630P6SD6

FMH-320AP2 New

PAR-500BRIE New